San Bernardino City Unified School District

PROPOSITION 39
ENERGY EFFICIENCY UPGRADES
EEP3 MECHANICAL

793 North E St, San Bernardino,
CA 92410

PHASE 2 ADDENDUM 01

January 15, 2019

Prepared By

JOHN SERGIO FISHER & ASSOCIATES
5567 Reseda Blvd., Suite 209, Los Angeles, CA 91356
(818) 344-3045; FAX (818) 344-0338

John Sergio Fisher & Associates Inc.
5567 Reseda Blvd. Suite 209
Los Angeles, CA 91356
818.344.3045
Fax 818.344.0338
www.jsfarchs.com

jsfa

ADDENDUM 1

To: **All bidders**
From: **John Sergio Fisher, Architect, AIA, Principal**
Project: SBCUSD Proposition 39 Energy Efficiency Upgrades EEP3
Phase 2 - Mechanical Upgrades

Please see equipment cut sheets for the following 4 schools:

- Attachment 1. Cajon High School;
- Attachment 2. Indian Springs High School;
- Attachment 3. San Gorgonio High School;
- Attachment 4. Shandin Hills Middle School.

End of Addendum

MAROKO & SHWE, INC.
Consulting Mechanical Engineers

PROP 39 – CAJON HIGH SCHOOL

HVAC EQUIPMENT CATALOG DATA

MAROKO & SHWE, INC.
Consulting Mechanical Engineers

PROP 39 CAJON HIGH SCHOOL

HVAC EQUIPMENT CATALOG DATA

Table of Contents

Symbol	Description	Page No.
CH-1	200 TON WATER COOLED CHILLER	1 - 7
	75 HP VFD	8 - 11
P-3 & 4	CONDENSER WATER PUMP	12-14

AquaEdge Chiller Configuration

CH-1

Tag Name: 23XRV- 200 T- Selection

Rated with AHRI Standard 550/590 (I-P)

Chiller
- Chiller Model **23XRVA1A2NPHR251-S**
- Starter / VFD ..... **VFD - Unit Mounted (STD Tier)**
- Refrigerant Type **R-134a**

Cooler
- Size **A1**
- Waterbox Type ..... **Nozzle-in-Head, 150 psi**
- Passes **2**
- Nozzle Arrangement . **D (Nozzles on Compressor End)**
- Tubing ..... **Super E3 (SUPE3), .025 in, Copper**
- Fluid Type ..... **Fresh Water**

Compressor
- Size ..... **P (PL Opt.)**
- Economizer ..... **No**

Weights and Approximate Dimensions
- Total Rigging Weight ..... **13793** lb
- Total Operating Weight ..... **14640** lb
- Refrigerant Weight ..... **820** lb
- Length x Width x Height ..... **167.62 x 46.38 x 89.00** in

Condenser
- Size **A2**
- Waterbox Type ..... **Nozzle-in-Head, 150 psi**
- Passes **2**
- Nozzle Arrangement . **S (Nozzles on Compressor End)**
- Tubing ..... **Spike Fin III (SPK3), .025 in, Copper**
- Fluid Type ..... **Fresh Water**

Motor
- Size ..... **H (P comp)**
- Line Voltage/Hertz (VFD Line Side) **460-3-60**
- Oil Pump Voltage/Hertz **120-3-60**

Specified Chiller Options:
- Isolation Valve Package
- Refrigerant Shipment: Shipped in Machine
- Automatic Hot Gas Bypass
- BACnet communication
- Full Factory Acoustic Insulation

Integrated VFD:
- Factory Mounting

CCS Chiller Start Up:
- Included

Warranty:
- One (1) year from start up or eighteen (18) months from shipment, whichever occurs first.
- Five (5) year refrigerant warranty included.
  - ** Please refer to the Refrigerant Warranty Certificate for more details regarding the Refrigerant Warranty **.

Note: This list of specified chiller options does not include any of the separate-ship accessories (gasket kits, refrigerant cylinders, standalone pumpout units, or storage tank / pumpout units), nor any items specified on a Quote Control. These items are specified as part of a bid, and not in the chiller tag. The Pricing Report includes all of these items as specified in a bid.

AquaEdge Chiller Performance Outputs

Project Name: 180202- SBUSD - Prop 39 Projects - Cajon HS, San G 02/02/2018
Sales Office: Sigler 02:51 PM

Tag Name: 23XRV- 200 T- Selection

Rated with AHRI Standard 550/590 (I-P)

Chiller
- Chiller Model **23XRVA1A2NPHR251-**
- Starter / VFD ..... **VFD - Unit Mounted (STD Tier)**
- Refrigerant Type **R-134a**
- Isolation Valve ..... **Installed**
- Automatic Hot Gas Bypass ..... **Installed**
- Operation Type ..... **Cooling**

Cooler
- Size **A1**
- Waterbox Type ..... **Nozzle-in-Head, 150 psi**
- Passes **2**
- Nozzle Arrangement . **D (Nozzles on Compressor End)**
- Tubing ..... **Super E3 (SUPE3), .025 in, Copper**
- Fluid Type ..... **Fresh Water**
- Fouling Factor(hr-sqft-F)/BTU **0.000100**

Compressor
- Size ..... **P (PL Opt.)**
- Economizer ..... **No**

Weights
- Total Rigging Weight ..... **13793** lb
- Total Operating Weight ..... **14640** lb
- Refrigerant Weight ..... **820** lb

Condenser
- Size **A2**
- Waterbox Type ..... **Nozzle-in-Head, 150 psi**
- Passes **2**
- Nozzle Arrangement . **S (Nozzles on Compressor End)**
- Tubing ..... **Spike Fin III (SPK3), .025 in, Copper**
- Fluid Type ..... **Fresh Water**
- Fouling Factor(hr-sqft-F)/BTU **0.000250**

Motor
- Size ..... **H (P comp)**
- Line Voltage/Hertz (VFD Line Side) **460-3-60**

Output Type	Full Load (I-P)	Part Load (I-P)	Part Load (I-P)	Part Load (I-P)
Percent Load	100.00	75.00	50.00	25.00
Chiller Capacity	200.0 tonR	150.0 tonR	100.0 tonR	50.00 tonR
Chiller Input kW	115.4 kW	59.40 kW	28.20 kW	17.80 kW
Chiller Efficiency	0.5771 kW/tonR	0.3957 kW/tonR	0.2819 kW/tonR	0.3562 kW/tonR
Chiller COPR	6.094 kW/kW	8.887 kW/kW	12.48 kW/kW	9.874 kW/kW
NPLV.IP	0.3320 kW/tonR	N/A	N/A	N/A
NPLV.IP (COP)	10.59 kW/kW	N/A	N/A	N/A
Cooler				
Entering Temp.	54.00 F	51.99 F	49.99 F	48.00 F
Leaving Temp.	46.00 F	46.00 F	46.00 F	46.00 F
Flow Rate	599.5 gpm	599.5 gpm	599.5 gpm	599.5 gpm
Pressure Drop	26.7 ft H2O	26.8 ft H2O	26.9 ft H2O	27.0 ft H2O
Condenser				
Leaving Temp.	94.34 F	81.68 F	69.31 F	67.17 F
Entering Temp.	85.00 F	75.00 F	65.00 F	65.00 F
Flow Rate	600.0 gpm	600.0 gpm	600.0 gpm	600.0 gpm
Pressure Drop	14.9 ft H2O	15.3 ft H2O	15.7 ft H2O	15.7 ft H2O
Motor				
Motor Rated Load Amps	175.2	136.8	112.5	124.7
Chiller Rated Line Amps	172	104	55	35
Chiller Inrush Amps	172			
Max Fuse/CB Amps	350			
Min Circuit Ampacity	216			

Messages:

AquaEdge Chiller Estimated Acoustic Data

Tag Name ..... **23XRV- 200 T- Selection**
Chiller Model **23XRVA1A2NPHR251-**
Sound Treatment ..... **Full Factory Acoustic Insulation**

Airborne Sound Pressure, dB

Percent Load	DBA
100	**86**
75	**78**
50	**77**
25	**77**

The full load and part load DBA values are accurate according to Engineering Data Release.

Notes:

Estimated Sound Pressure Levels - dB re: 20 micropascal.

Sound pressure levels used to develop this program were measured per AHRI Standard 575.

The sound pressure levels were measured in an acoustical free-field, i.e. a non-reflective environment. Field sound measurements can vary significantly as a function of the reflectivity and proximity of nearby surfaces and the presence of other sound sources.

Octave band sound pressure level data, for each of the above specified loads, are available upon request.

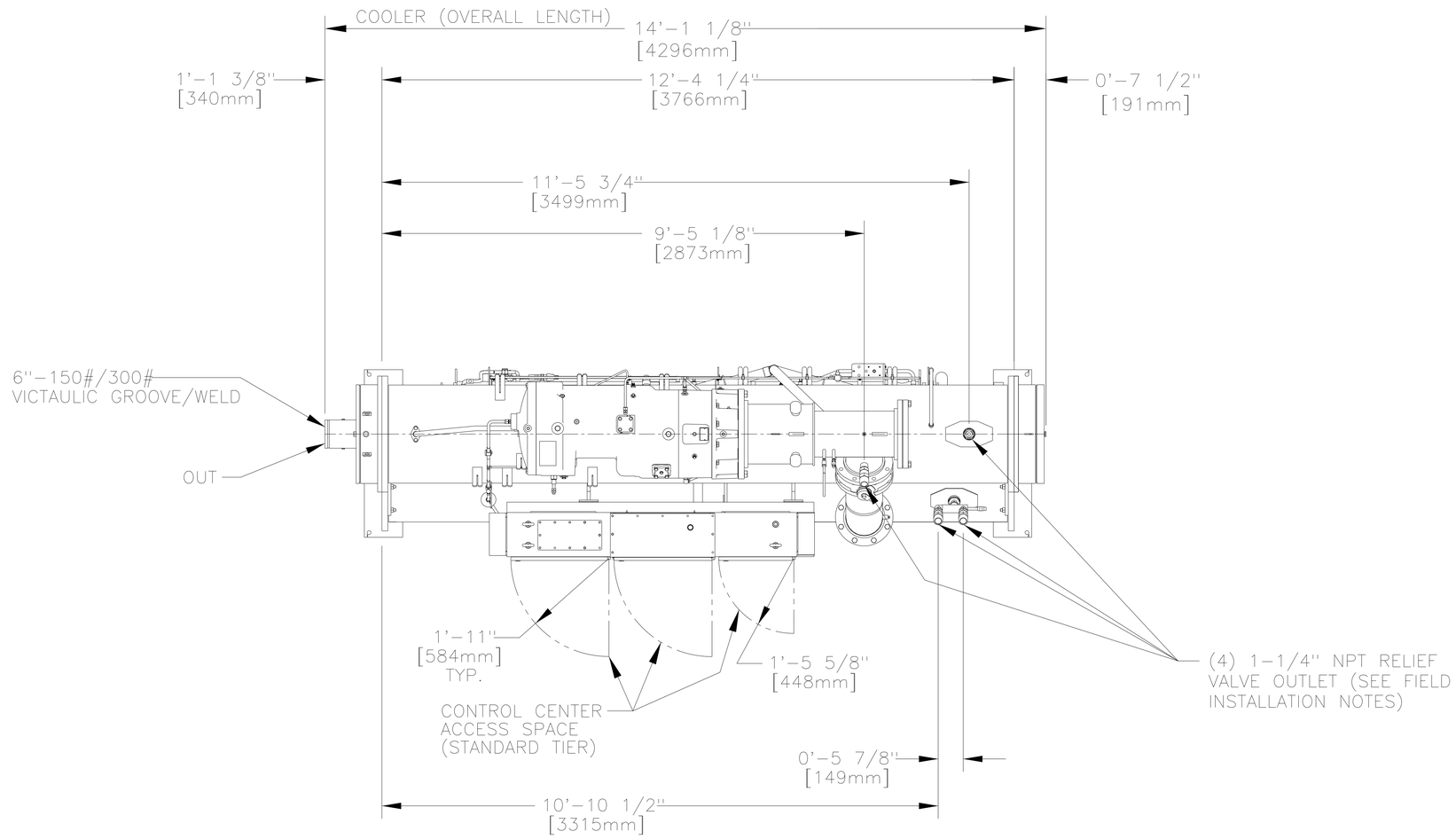

SUCTION END

PLAN VIEW

DISCHARGE END

NOTE: CONDENSER WATER BOXES NOT SHOWN FOR CLARITY.
SEE FRONT, REAR, SUCTION END AND DISCHARGE END VIEWS
FOR DIMENSIONAL INFORMATION.

HEAT EXCHANGERS 23XRA1-A6						MACHINE OPTIONS		
COOLER					CONDENSER			
PASS	NOZZLE CODE	PRESSURE	W/B COVER WT. DISCHARGE END	W/B COVER WT. SUCTION END		ISOLATION VALVE	HOT GAS BYPASS	ECONOMIZER
2	D	150/300 PSIG	333 LBS. [151 KG.]	232 LBS. [105 KG.]		✓	✓	--

NOTES:

1. TOLERANCES ON NOZZLE LOCATIONS AND OVERALL DIMENSIONS ARE ± 1" [25mm].
2. CARRIER DOES NOT RECOMMEND PRE-FAB WATER PIPING.
3. FOR VICTAULIC GROOVE DETAIL SEE DRAWING 19XR14VG.
4. ✓ DENOTES APPLICABLE CONDITIONS
5. IF HINGED WATERBOXES ARE INCLUDED, THE HINGES ARE NOT SHOWN ON THIS DRAWING AND MAY CHANGE THE MACHINE OVERALL LENGTH AND WIDTH. PLEASE CONSULT THE HINGED WATERBOX DRAWING FOR MORE DETAILS.

Carrier
A United Technologies Company
P.O. BOX 4808, SYRACUSE, N.Y. 13221

JOB NAME:
180202- SBUSD - Prop 39

BUYER:

SALES ENG.:
Samuel Andrew

MODEL NO.:
23XRVA1A2NPHR251-

JOB NO.:

P.O. NO.:

PREPARED BY:

ELECTRICAL CHARACTERISTICS:
460/3/60

JOBSITE LOCATION:

SALES OFFICE:
Sigler

REFRIGERANT NO.:
R-134a

NOTES:

COMP'R: TP
COOLER: 23XRA1-A6
COND'R: 23XRA1-A6
MACHINE ASSEMBLY
PLAN VIEW

DATE: 2/2/2018

REVISION: ___

THIS DOCUMENT IS THE PROPERTY OF CARRIER CORP. AND IS DELIVERED UPON THE EXPRESS CONDITION THAT THE CONTENTS WILL NOT BE DISCLOSED OR USED WITHOUT CARRIER CORP. WRITTEN CONSENT.

SUBMISSION OF THESE DWG'S. OR DOCUMENTS DOES NOT CONSTITUTE PART PERFORMANCE OR ACCEPTANCE OF CONTRACT.

CARRIER DWG # 23XRA1TP-P
REV. D SHT 01 OF 01
DATE: 6/20/2017
SUPERSEDES DWG. DATED:
5/5/2017

23XRTP-12

SHT 1 OF 4

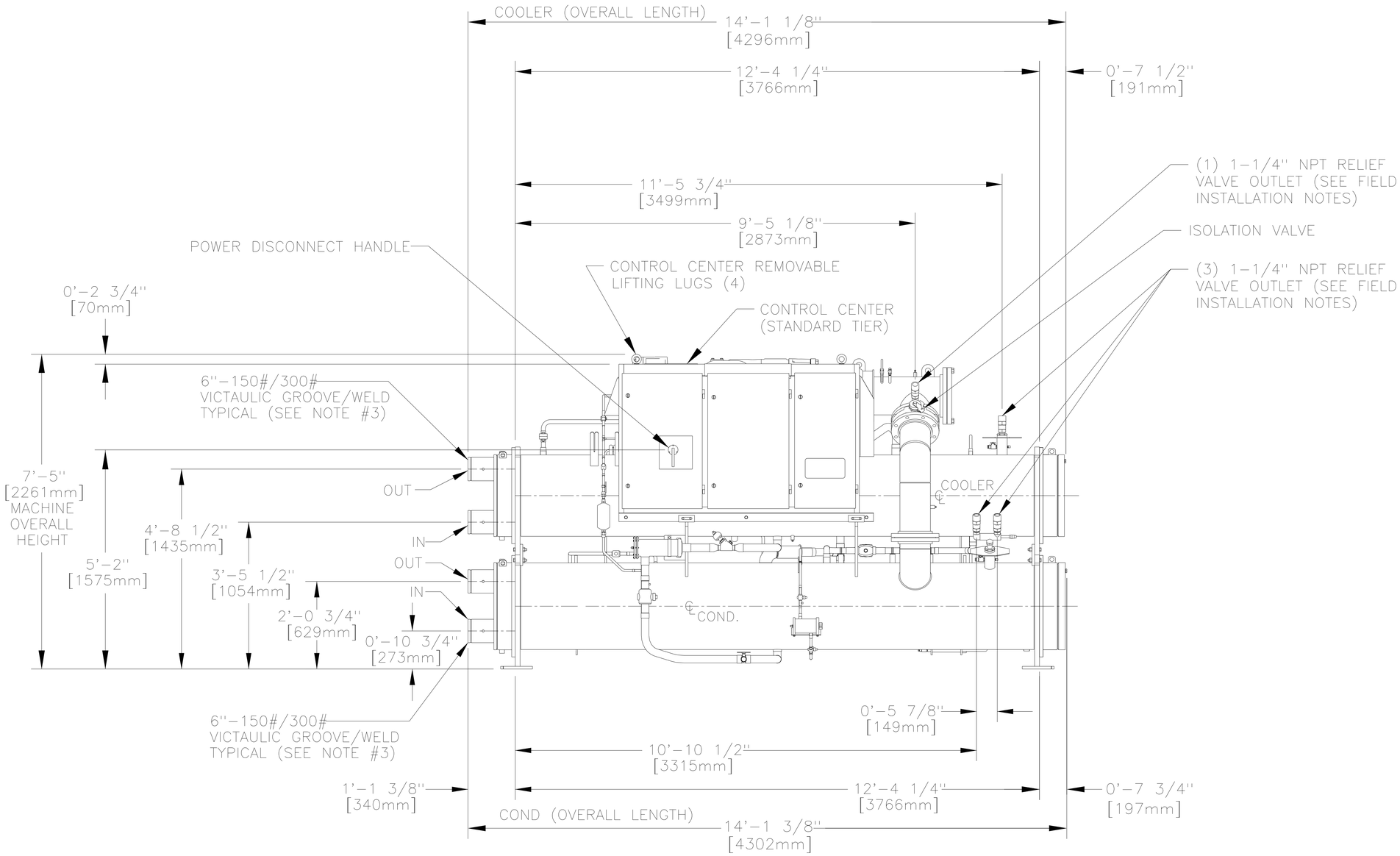

HEAT EXCHANGERS 23XRA1-A6										MACHINE OPTIONS		
COOLER					CONDENSER							
PASS	NOZZLE CODE	PRESSURE	W/B COVER WT. DISCHARGE END	W/B COVER WT. SUCTION END	PASS	NOZZLE CODE	PRESSURE	W/B COVER WT. DISCHARGE END	W/B COVER WT. SUCTION END	ISOLATION VALVE	HOT GAS BYPASS	ECONOMIZER
2	D	150/300 PSIG	333 LBS. [151 KG.]	232 LBS. [105 KG.]	2	S	150/300 PSIG	406 LBS. [184 KG.]	265 LBS. [120 KG.]	✓	✓	--

NOTES:

1. TOLERANCES ON NOZZLE LOCATIONS AND OVERALL DIMENSIONS ARE ± 1" [25mm].
2. CARRIER DOES NOT RECOMMEND PRE-FAB WATER PIPING.
3. FOR VICTAULIC GROOVE DETAIL SEE DRAWING 19XR14VG.
4. ✓ DENOTES APPLICABLE CONDITIONS
5. IF HINGED WATERBOXES ARE INCLUDED, THE HINGES ARE NOT SHOWN ON THIS DRAWING AND MAY CHANGE THE MACHINE OVERALL LENGTH AND WIDTH. PLEASE CONSULT THE HINGED WATERBOX DRAWING FOR MORE DETAILS.

Carrier
A United Technologies Company
P.O. BOX 4808, SYRACUSE, N.Y. 13221

JOB NAME: 180202- SBUSD - Prop 39

BUYER:

SALES ENG.: Samuel Andrew

MODEL NO.: 23XRVA1A2NPHR251-

JOB NO.:

P.O. NO.:

PREPARED BY:

ELECTRICAL CHARACTERISTICS: 460/3/60

JOBSITE LOCATION:

SALES OFFICE: Sigler

REFRIGERANT NO.: R-134a

NOTES:

COMP'R: TP
COOLER: 23XRA1-A6
COND'R: 23XRA1-A6
MACHINE ASSEMBLY
FRONT VIEW

DATE: 2/2/2018

REVISION: ___

THIS DOCUMENT IS THE PROPERTY OF CARRIER CORP. AND IS DELIVERED UPON THE EXPRESS CONDITION THAT THE CONTENTS WILL NOT BE DISCLOSED OR USED WITHOUT CARRIER CORP. WRITTEN CONSENT.

SUBMISSION OF THESE DWG'S. OR DOCUMENTS DOES NOT CONSTITUTE PART PERFORMANCE OR ACCEPTANCE OF CONTRACT.

CARRIER DWG # 23XRA1TP-F
REV. D SHT 01 OF 01
DATE: 6/20/2017
SUPERSEDES DWG. DATED: 5/5/2017

23XRTP-12

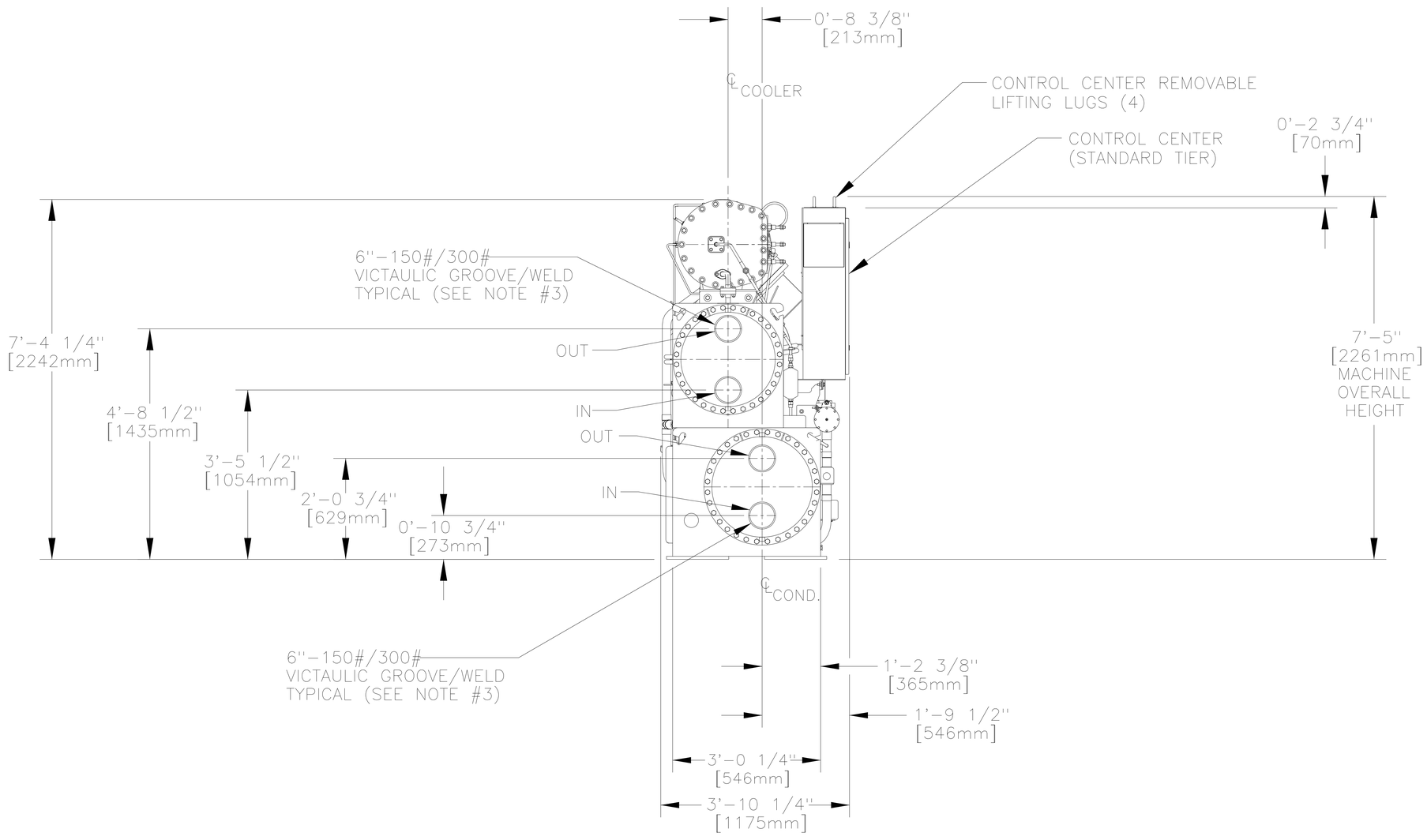

SUCTION END VIEW

HEAT EXCHANGERS 23XRA1-A6										MACHINE OPTIONS		
COOLER					CONDENSER							
PASS	NOZZLE CODE	PRESSURE	W/B COVER WT. DISCHARGE END	W/B COVER WT. SUCTION END	PASS	NOZZLE CODE	PRESSURE	W/B COVER WT. DISCHARGE END	W/B COVER WT. SUCTION END	ISOLATION VALVE	HOT GAS BYPASS	ECONOMIZER
2	D	150/300 PSIG	333 LBS. [151 KG.]	232 LBS. [105 KG.]	2	S	150/300 PSIG	406 LBS. [184 KG.]	265 LBS. [120 KG.]	✓	✓	--

NOTES:

1. TOLERANCES ON NOZZLE LOCATIONS AND OVERALL DIMENSIONS ARE ± 1" [25mm].
2. CARRIER DOES NOT RECOMMEND PRE-FAB WATER PIPING.
3. FOR VICTAULIC GROOVE DETAIL SEE DRAWING 19XR14VG.
4. ✓ DENOTES APPLICABLE CONDITIONS
5. IF HINGED WATERBOXES ARE INCLUDED, THE HINGES ARE NOT SHOWN ON THIS DRAWING AND MAY CHANGE THE MACHINE OVERALL LENGTH AND WIDTH. PLEASE CONSULT THE HINGED WATERBOX DRAWING FOR MORE DETAILS.

Carrier
A United Technologies Company
P.O. BOX 4808, SYRACUSE, N.Y. 13221

JOB NAME:
180202- SBUSD - Prop 39

BUYER:

SALES ENG.:
Samuel Andrew

MODEL NO.:
23XRVA1A2NPHR251-

JOB NO.:

P.O. NO.:

PREPARED BY:

ELECTRICAL CHARACTERISTICS:
460/3/60

JOBSITE LOCATION:

SALES OFFICE:
Sigler

REFRIGERANT NO.:
R-134a

NOTES:

COMP'R: TP
COOLER: 23XRA1-A6
COND'R: 23XRA1-A6
MACHINE ASSEMBLY
SUCTION END VIEW

DATE: 2/2/2018

REVISION: ___

THIS DOCUMENT IS THE PROPERTY OF CARRIER CORP. AND IS DELIVERED UPON THE EXPRESS CONDITION THAT THE CONTENTS WILL NOT BE DISCLOSED OR USED WITHOUT CARRIER CORP. WRITTEN CONSENT.

SUBMISSION OF THESE DWG'S. OR DOCUMENTS DOES NOT CONSTITUTE PART PERFORMANCE OR ACCEPTANCE OF CONTRACT.

CARRIER DWG # 23XRA1TP-D
REV. D SHT 01 OF 01
DATE: 6/20/2017
SUPERSEDES DWG. DATED: 5/5/2017

23XRTP-12

SHT 3 OF 4

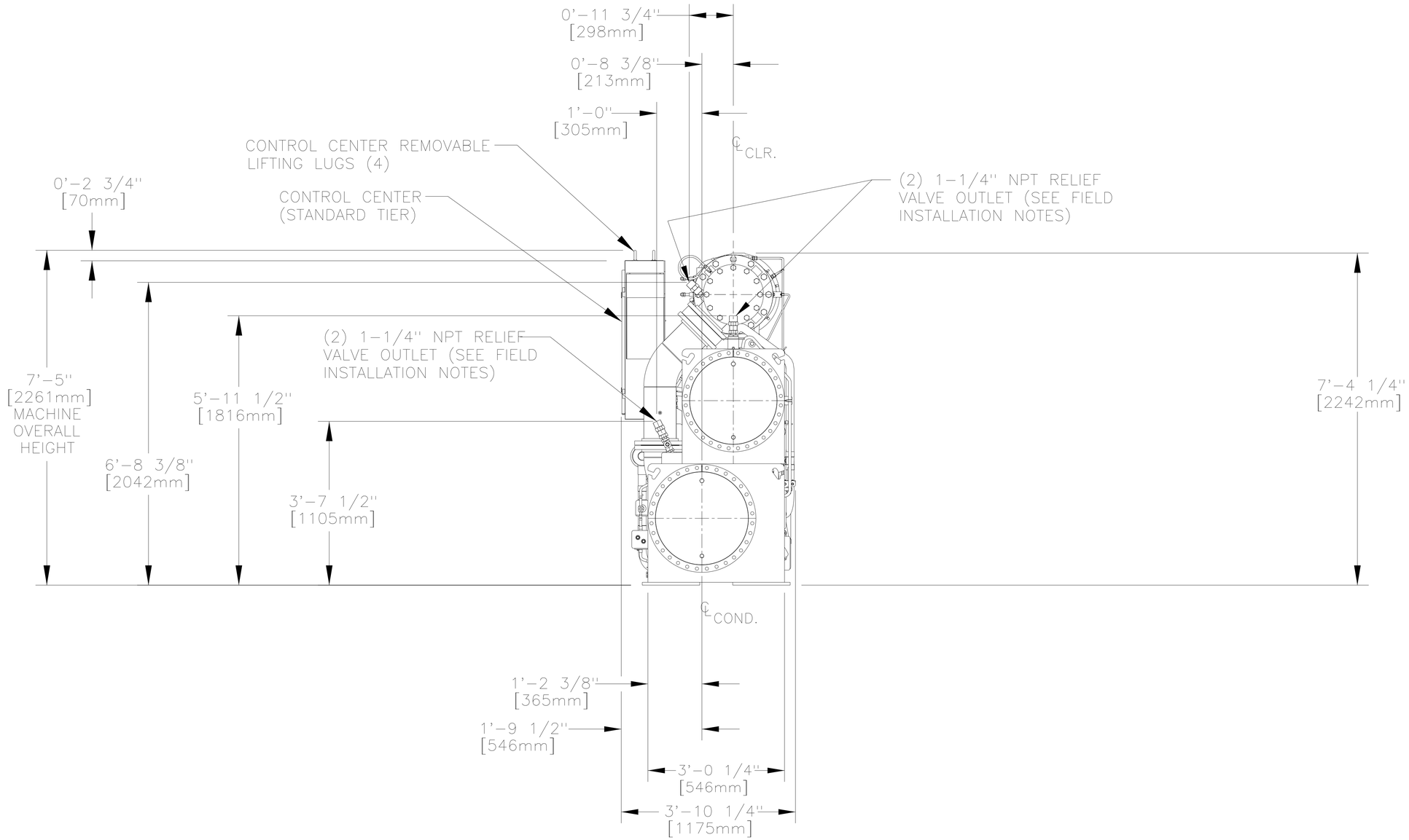

DISCHARGE END VIEW

HEAT EXCHANGERS 23XRA1-A6										MACHINE OPTIONS		
COOLER					CONDENSER							
PASS	NOZZLE CODE	PRESSURE	W/B COVER WT. DISCHARGE END	W/B COVER WT. SUCTION END	PASS	NOZZLE CODE	PRESSURE	W/B COVER WT. DISCHARGE END	W/B COVER WT. SUCTION END	ISOLATION VALVE	HOT GAS BYPASS	ECONOMIZER
2	D	150/300 PSIG	333 LBS. [151 KG.]	232 LBS. [105 KG.]	2	S	150/300 PSIG	406 LBS. [184 KG.]	265 LBS. [120 KG.]	✓	✓	--

NOTES:

1. TOLERANCES ON NOZZLE LOCATIONS AND OVERALL DIMENSIONS ARE ± 1" [25mm].
2. CARRIER DOES NOT RECOMMEND PRE-FAB WATER PIPING.
3. FOR VICTAULIC GROOVE DETAIL SEE DRAWING 19XR14VG.
4. ✓ DENOTES APPLICABLE CONDITIONS
5. IF HINGED WATERBOXES ARE INCLUDED, THE HINGES ARE NOT SHOWN ON THIS DRAWING AND MAY CHANGE THE MACHINE OVERALL LENGTH AND WIDTH. PLEASE CONSULT THE HINGED WATERBOX DRAWING FOR MORE DETAILS.

Carrier
A United Technologies Company
P.O. BOX 4808, SYRACUSE, N.Y. 13221

JOB NAME: 180202- SBUSD - Prop 39

BUYER:

SALES ENG.: Samuel Andrew

MODEL NO.: 23XRVA1A2NPHR251-

JOB NO.:

P.O. NO.:

PREPARED BY:

ELECTRICAL CHARACTERISTICS: 460/3/60

JOBSITE LOCATION:

SALES OFFICE: Sigler

REFRIGERANT NO.: R-134a

NOTES:

COMP'R: TP
COOLER: 23XRA1-A6
COND'R: 23XRA1-A6
MACHINE ASSEMBLY
DISCHARGE END VIEW

DATE: 2/2/2018

REVISION: ___

THIS DOCUMENT IS THE PROPERTY OF CARRIER CORP. AND IS DELIVERED UPON THE EXPRESS CONDITION THAT THE CONTENTS WILL NOT BE DISCLOSED OR USED WITHOUT CARRIER CORP. WRITTEN CONSENT.

SUBMISSION OF THESE DWG'S. OR DOCUMENTS DOES NOT CONSTITUTE PART PERFORMANCE OR ACCEPTANCE OF CONTRACT.

CARRIER DWG # 23XRA1TP-C
REV. D SHT 01 OF 01
DATE: 6/20/2017
SUPERSEDES DWG. DATED: 5/5/2017

23XRTP-12

Bell & Gossett
a xylem brand

75 HP VFD

SUBMITTAL
B-551D

JOB: **REPRESENTATIVE:**

UNIT TAG: **ORDER NO.** **DATE:**
ENGINEER: **SUBMITTED BY:** **DATE:**
CONTRACTOR: **APPROVED BY:** **DATE:**

Technologic® Intelligent Pump Controller

TECHNOLOGIC STANDARD FEATURES	
CONTROL METHOD	Constant Pressure, Linear Control Curve, Quadratic Control Curve, Factory configured for sensorless operation (optional). Field configurable for use with a wired transducer.
STARTUP GENIE	Quick start for programming hydraulic specific applications and pump protections.
ENCLOSURE	UL Type ☐1 ☐12 ☐3R ☐4X (Bypass has type 1 and 12 only)
POWER DISCONNECT SWITCH	☐ Standard Disconnect ☐ Fused Disconnect Switch (Fused Disconnect Switch is standard for Drive-Byspass and 150-600HP Drive)
EMI/RFI CONTROL	Integrated filter to meet EN62800-3.
HARMONIC SUPPRESSION	Integrated non-saturating dual DC link reactors provide better harmonic performance than a 5% AC line reactor.
COOLING	Fan-cooled through temperature controlled and easy replacement.
AMBIENT TEMPERATURE RATING	14°F to 113°F (-10°C to 45° C)
COMMUNICATION PROTOCOLS	BACnet, Modbus RTU, N2 Metasys as standard
ANALOG INPUTS	1 configurable for either voltage (0 to 10VDC) or current (0/4 to 20mA) and 1 current (0/4 to 20mA).
ANALOG OUTPUTS	1 (0/4 to 20mA) up to 500 ohm load accurate to 1% of full scale
DIGITAL INPUTS	4 (0 to 24VDC), NPN or PNP, 0 to 24VDC, on 5 msec scan interval, Up to 2 can be configured as pulse inputs.
DIGITAL OUTPUTS	2 (0 to 24VDC), 40mA max current, configurable as pulse outputs.
RELAY OUTPUTS	2 programmable, 240VAC or 400VAC up to 2 A
BYPASS OPTION	☐ None ☐ Drive-Bypass, 3 Contactor, 100 KA SCCR, Electronic Control, Fused Disconnect Switch

200 - 240VAC 1 Phase Mains Drive			
HP	Output Current	TYPE 1 Frame	TYPE 12/3R/4X Frame
1.5	6.6	A5	A5
2	7.5	B1	B1
3	10.6	B1	B1
5	16.7	B1	B1
7.5	24.2	B1	B1
10	30.8	B2	B2
20	59.4	C1	C1
30	88	C2	C2

200 - 240 VAC 3 Phase Mains Drive 208 / 230 VAC 3 Phase Mains Drive-Bypass							
HP	Output Current (A)		TYPE 1 Frame		TYPE 12 Frame		TYPE 3R/4X Frame
	Drive 200-240 VAC	Drive-Bypass 208/230 VAC	Drive 200-240 VAC	Drive-Bypass 208/230 VAC	Drive 200-240 VAC	Drive-Bypass 208/230 VAC	Drive 200-240 VAC
0.5	N/A	2.4/2.2	N/A	A2	N/A	A5	N/A
0.75	N/A	3.5/3.2	N/A	A2	N/A	A5	N/A
1	N/A	4.6/4.2	N/A	A2	N/A	A5	N/A
1.5	6.6	6.6/6	A2	A2	A5	A5	A5
2	7.5	7.5/6.8	A2	A2	A5	A5	A5
3	10.6	10.6/9.6	A2	A2	A5	A5	A5
5	16.7	16.7/15.2	A3	A3	A5	A5	A5
7.5	24.2	24.2/22	B1	B3	B1	B1	B1
10	30.8	30.8/28	B1	B3	B1	B1	B1
15	46.2	46.2/42	B1	B3	B1	B2	B1
20	59.4	59.4/54.0	B2	B4	B2	B2	B2
25	74.8	74.8/68	C1	C3/B4	C1	C1	C1
30	88	88/80	C1	C3	C1	C1	C1
40	115	114/104	C1	C3	C1	C2	C1
50	143	143/130	C2	C4	C2	C2	C2
60	170	169/154	C2	C4	C2	C2	C2

380 - 480 VAC 3 Phase Mains Drive 460 VAC 3 Phase Mains Drive-Bypass							
HP	Output Current (A)		TYPE 1 Frame		TYPE 12 Frame		TYPE 3R/4X Frame
	Drive 380-480 VAC	Drive-Bypass 460 VAC	Drive 380-480 VAC	Drive-Bypass 460 VAC	Drive 380-480 VAC	Drive-Bypass 460 VAC	Drive 380-480 VAC
0.5	N/A	1.1	N/A	A2	N/A	A5	N/A
0.75	N/A	1.6	N/A	A2	N/A	A5	N/A
1	N/A	2.1	N/A	A2	N/A	A5	N/A
1.5	2.7	3	A2	A2	A5	A5	A5
2	3.4	3.4	A2	A2	A5	A5	A5
3	4.8	4.8	A2	A2	A5	A5	A5
5	8.2	7.6	A2	A2	A5	A5	A5
7.5	11	11	A3	A2	A5	A5	A5
10	14.5	14	A3	A2	A5	A5	A5
15	21	21	B1	B3	B1	B1	B1
20	27	27	B1	B3	B1	B1	B1
25	34	34	B1	B3	B1	B1	B1
30	40	40	B2	B4	B2	B2	B2
40	52	52	B2	B4	B2	B2	B2
50	65	65	C1	B4	C1	C1	C1
60	80	77	C1	C3	C1	C1	C1
75	105	96	C1	C3	C1	C1	C1
100	130	124	C2	C4	C2	C2	C2
125	160	156	C2	C4	C2	C2	C2

380 - 480 VAC 3 Phase Mains Drive 460 VAC 3 Phase Mains Drive-Bypass					
HP	Output Current (A)	E00/E20	TYPE 1 Frame	TYPE 12 Frame	TYPE 3R Frame
	Drive 380-480 VAC	Drive 380-480 VAC	Drive 380-480 VAC	Drive 380-480 VAC	Drive 380-480 VAC
150	190	D3h	D5h	D5h	D1h
200	240	D3h	D5h	D5h	D1h
250	302	D3h	D5h	D5h	D1h
300	361	D4h	D7h	D7h	D2h
350	443	D4h	D7h	D7h	D2h
450	535	D4h	D7h	D7h	D2h
500	590	E2	E1	E1	N/A
550	678	E2	E1	E1	N/A
600	730	E2	E1	E1	N/A

525 - 600 VAC 3 Phase Mains Drive 600 VAC 3 Phase Mains Drive-Bypass							
HP	Output Current (A)		TYPE 1 Frame		TYPE 12 Frame		TYPE 3R/4X Frame
	Drive 525-600 VAC	Drive-Bypass 600 VAC	Drive 525-600 VAC	Drive-Bypass 600 VAC	Drive 525-600 VAC	Drive-Bypass 600 VAC	Drive 525-600 VAC
0.5	N/A	0.9	N/A	A3	N/A	A5	N/A
0.75	N/A	1.3	N/A	A3	N/A	A5	N/A
1	N/A	1.7	N/A	A3	N/A	A5	N/A
1.5	2.4	2.4	A3	A3	A5	A5	A5
2	2.7	2.7	A3	A3	A5	A5	A5
3	3.9	3.9	A3	A3	A5	A5	A5
5	6.1	6.1	A3	A3	A5	A5	A5
7.5	9	9	A3	A3	A5	A5	A5
10	11	11	A3	A3	A5	A5	A5
15	18	17	B1	B3	B1	B1	B1
20	22	22	B1	B3	B1	B1	B1
25	27	27	B1	B3	B1	B1	B1
30	34	32	B2	B4	B2	B2	B2
40	41	41	B2	B4	B2	B2	B2
50	52	52	C1	B4	B2	C1	B2
60	62	62	C1	C3	C1	C1	C1
75	83	77	C1	C3	C1	C1	C1
100	100	99	C2	C4	C2	C2	C2
125	131	125	C2	C4	C2	C2	C2

525 - 600 VAC 3 Phase Mains Drive 600 VAC 3 Phase Mains Bypass					
HP	Output Current (A)	E00/E20	TYPE 1 Frame	TYPE 12 Frame	TYPE 3R Frame
	Drive 525-600 VAC	Drive 525-600 VAC	Drive 525-600 VAC	Drive 525-600 VAC	Drive 525-600 VAC
150	155	D3h	D5h	D5h	D1h
200	192	D3h	D5h	D5h	D1h
250	242	D3h	D5h	D5h	D1h
300	290	D4h	D7h	D7h	D2h
350	344	D4h	D7h	D7h	D2h
400	N/A	N/A	N/A	N/A	N/A
450	450	D4h	D7h	D7h	D2h
500	590	E2	E1	E1	N/A
600	570	E2	E1	E1	N/A

Drive Drawings and Specification Table

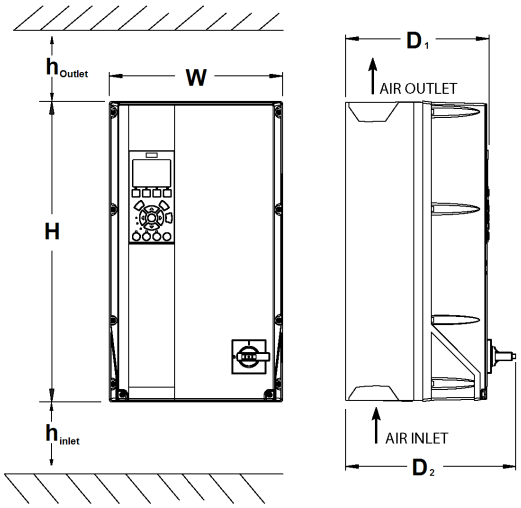

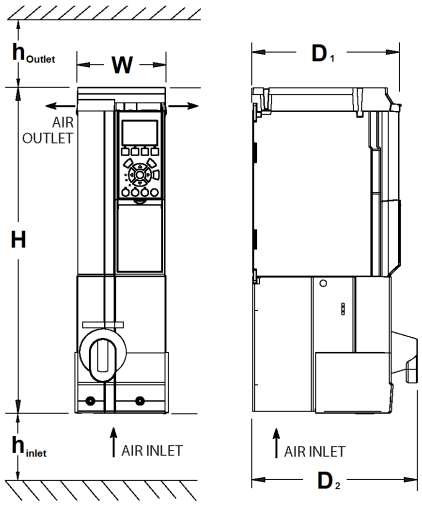

Frame Size	Nominal Weight lbs/Kg	Enclosure Rating		Dimensions					
		TYPE 1	TYPE 12	**H** inches/mm	**W** inches/mm	**D1** inches/mm	**D2** inches/mm	**h inlet** inches/mm	**h outlet** inches/mm
A2[1]	10.8/4.9	X		19.1/485	5.2/132	8.7/222	9.6/245	3.9/100	3.9/100
A3[1]	14.6/6.6	X		19.1/485	5.2/132	8.2/207	9.6/245	3.9/100	3.9/100
A5	31.3/14.2		X	16.5/420	9.5/242	7.9/200	9.4/238	3.9/100	3.9/100
B1	51/23	X	X	18.9/480	9.5/242	10.2/260	12/304	3.9/100	3.9/100
B2	60/27	X	X	25.6/650	9.5/242	10.2/260	12/304	3.9/100	3.9/100
C1	99/45	X	X	26.9/680	12.1/308	12.2/310	14.1/358	7.9/200	7.9/200
C2	143/65	X	X	30.2/770	14.6/370	13/335	14.9/393	8.9/225	8.9/225

Frame Size	Nominal Weight lbs/Kg	Enclosure Rating		Dimensions					
		TYPE 1	TYPE 12	**H** inches/mm	**W** inches/mm	**D1** inches/mm	**D2** inches/mm	**h inlet** inches/mm	**h outlet** inches/mm
D1	229.3/104	X	X	47.6/1209	16.54/420	14.96/380	16.4/417	8.9/225	8.9/225
D2	332.9/151	X	X	62.56/1589	16.54/420	14.96/380	16.4/417	8.9/225	8.9/225
D3	200.62/91	X	X	41.18/1046	16.06/408	14.76/375	16.4/417	8.9/225	8.9/225
D4	304.24/138	X	X	52.24/1327	16.06/408	14.76/375	16.4/417	8.9/225	8.9/225
D5	255/116	X	X	52.13/1324	12.8/325	15/381	16.3/416	8.9/225	8.9/225
D7	440/200	X	X	77.87/1978	16.54/420	15.2/386	16.5/418	8.9/225	8.9/225

Bypass Drawings and Specification Table

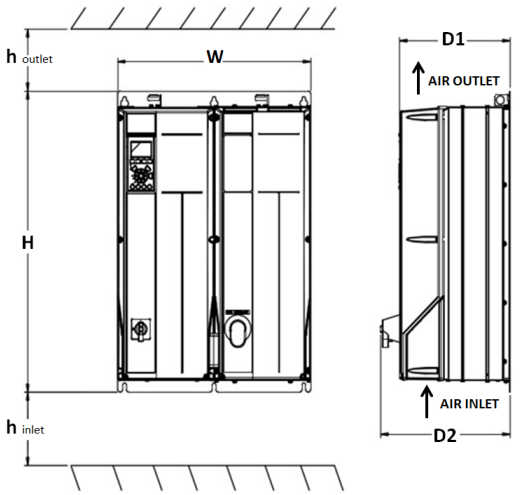

SIDE - SIDE

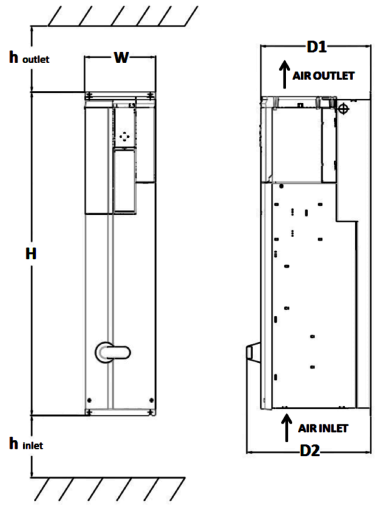

TOP - BOTTOM

Frame Data	Nominal Weight lbs/Kg	Temperature Rating (°F/°C)		Enclosure Rating		Dimensions						
		NEMA 1	NEMA 12	NEMA 1	NEMA 12	**H** inches/mm	**W** inches/mm	**D1** inches/mm	**D2** inches/mm	**h inlet** inches/mm	**h outlet** inches/mm	Configuration
A2[1]	35/16	113/45		X		31.74/806	7.63/194	8.27/210	9.73/247	3.94/100	3.94/100	Top-Bottom
A3[1]	35/16	113/45		X		31.74/806	7.63/194	8.27/210	9.73/247	3.94/100	3.94/100	Top-Bottom
A5	55/25		104/40		X	18.86/479	19.18/487	8.55/217	10.30/262	3.94/100	3.94/100	Side-Side
B1	84/38.1		104/40		X	21.48/546	19.09/485	10.84/275	12.86/327	3.94/100	3.94/100	Side-Side
B2	105/48		104/40		X	28.18/716	19.09/485	10.86/276	12.81/325	3.94/100	3.94/100	Side-Side
B3	84/38	104/40		X		41.77/1061	9.11/231	14.15/360	15.94/405	7.87/200	2.00/51	Top-Bottom
B4	106/48	104/40		X		43.30/1100	9.77/248	16.30/414	17.70/450	7.87/200	2.00/51	Top-Bottom
C1	145/66		104/40		X	29.94/761	24.37/619	12.74/324	14.87/378	3.94/100	3.94/100	Side-Side
C2	190/86		104/40		X	33.49/851	29.24/743	13.72/349	16.22/412	8.86/225	8.86/225	Side-Side
C3	167/76	104/40		X		54.38/1381	12.69/322	16.59/422	17.99/457	7.87/200	2.00/51	Top-Bottom
C4	248/112	104/40		X		59.64/1515	15.13/384	16.59/422	18.01/458	8.86/225	2.00/51	Top-Bottom

Notes:
1) A2, A3 and B3 frames require a minimum of 1.5 inch (38.1mm) clearance on either side for proper air flow and cooling

Xylem Inc.
8200 N. Austin Avenue, Morton Grove, IL 60053
Phone: (847)966-3700 Fax: (847)965-8379
www.bellgossett.com
Bell & Gossett is a trademark of Xylem Inc. or one of its subsidiaries.
© 2017 Xylem Inc.

Bell & Gossett
a xylem brand

P-3 & P-4

Submittal

Job/Project:	Representative: Dawson Company	
ESP-Systemwize: WIZE-C3D4F0 Created On: 12/27/2018	Phone: (626) 797-9710	
Location/Tag:	Email: sales@dawsonco.com	
Engineer:	Submitted By:	Date:
Contractor:	Approved By:	Date:

Double Suction Split Case Pump

Series: VSX-VSCS

Model: 5x6x10.5B

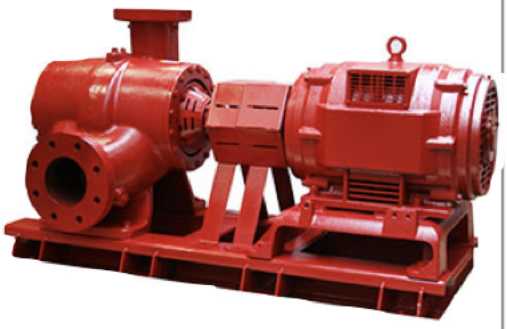

Features & Design

- Space saving footprint
- Multiple suction and discharge flange orientations
- Maintenance-free bearings
- Alignment-friendly coupling

*The Bell & Gossett Series VSX-VSCS has maintenance-free Bearings, a one-piece unitized seal, groutless base plate, and alignment-friendly coupling.

http://bellgossett.com/pumps-circulators/double-suction-pumps/series-vsx-split-case-pump/

Pump Selection Summary

Pump Capacity	1260 US gpm
Pump Head	45 ft
Control Head	13.5 ft
Duty Point Pump Efficiency	72.6 %
Pump PLEVv Efficiency	75.5 %
Impeller Diameter	8.75 in
Motor HP	25 hp
Duty Point Power	19.6 bhp
Motor Speed	1800 rpm
RPM @ Duty Point	1759 rpm
NPSHr	10.2 ft
Minimum Shutoff Head	73.7 ft
Minimum Flow at RPM	225 gpm
Flow @ BEP	977 gpm
Fluid Temperature	68 °F
Fluid Type	Water
Weight *(approx. - consult rep for exact)*	1530 lbs
Pump Floor Space Calculation	13.57 ft²

Performance Curve

Energy Efficiency Ratings:
Pump & Motor PEIcl: 0.0 ERcl: ---
Pump, Motor & Drive: PEIvl: 0.0 ERvl: ---

PREMIUM EFFICIENCY PRODUCT

VSX-VSCS
5x6x10.5B
1800 RPM

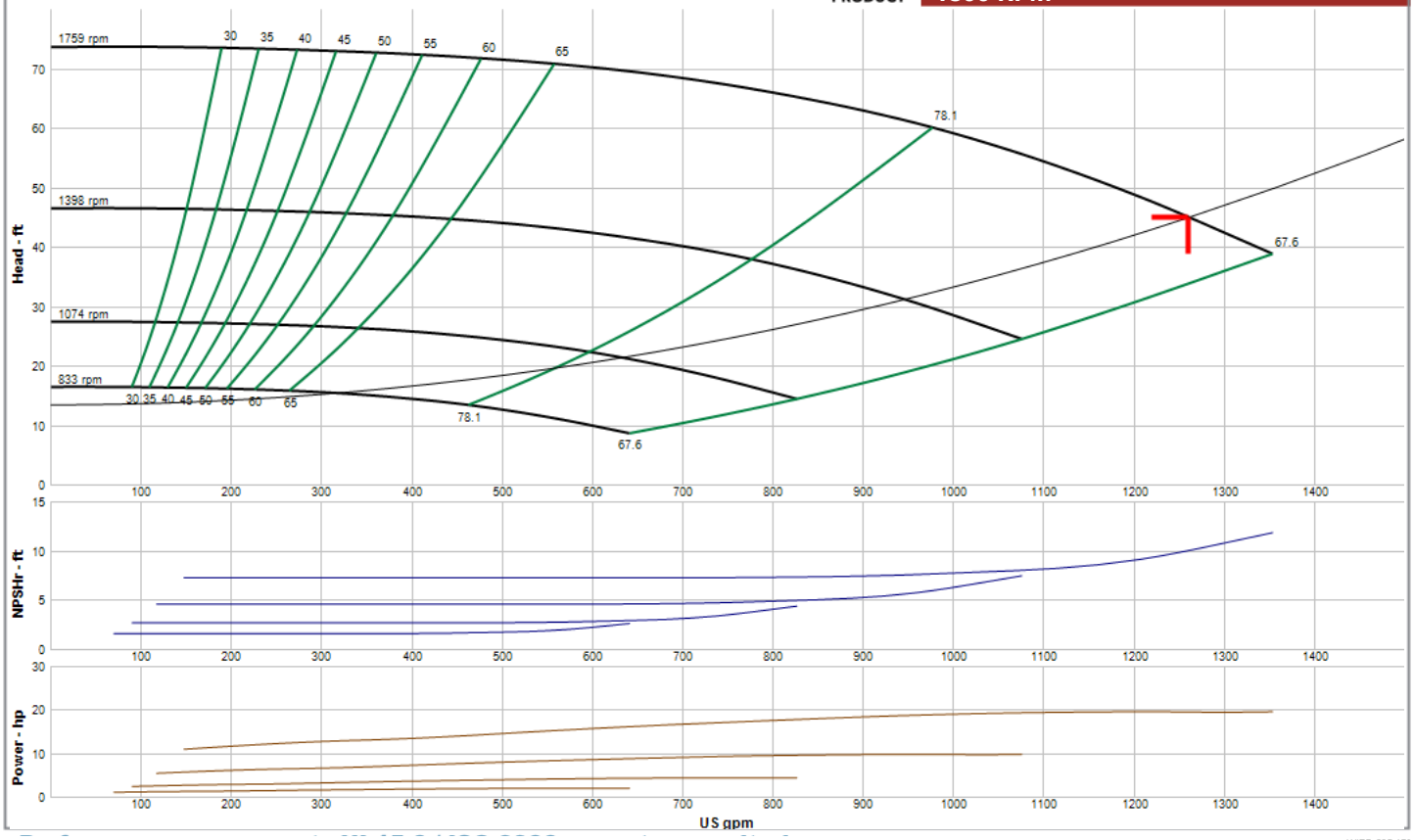

Performance curve meets 14.6 / ISO 9906 acceptance criteria

WIZE-C3D4F0

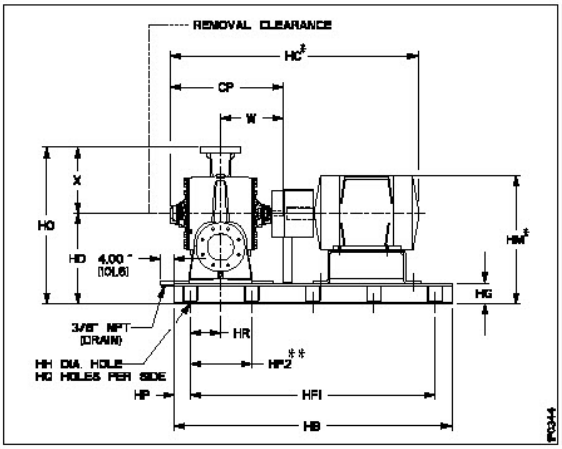

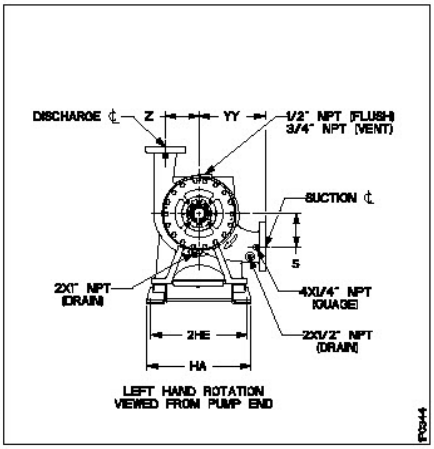

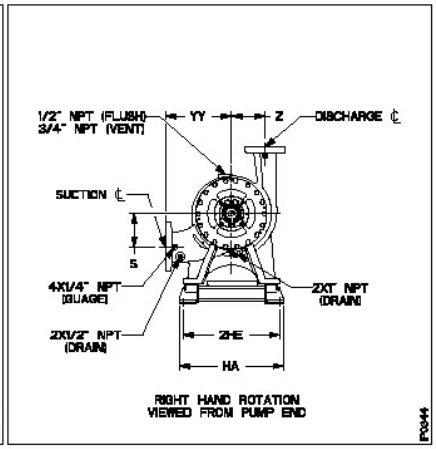

Dimensions are subject to change. Not to be used for construction purposes unless certified

Discharge Size: 5	CP-Length: 32.24	HA-Width: 25	HB-Length: 67	HC-Length: 68.418
HD-Height: 19.25	HE2-Spacing of Holes: 23.38	HF1-Spacing of Holes: 57	HF2-Spacing of Holes: 19	HG-Height: 5.25
HH-Diameter: 0.88	HM-Height: 27.07	HO-Height: 33	HP-Length: 5	HQ-Holes Per Side: 4
HR-Length: 6.625	S-Dim: 7.025	W-Length: 17.81	X-Dim: 13.75	YY-Dim: 13.75
Z-Dim: 7.025	Removal Clearance: 21	Discharge Flange OD: 10.75	Discharge Flange Thickness: 1.563	Discharge Bolt Circle Dia: 8.5
Discharge No of Bolts: 8	Discharge Bolt Size: 0.875	Suction Flange OD: 12.13	Suction Flange Thickness: 1.625	Suction Bolt Circle Dia: 9.5
Suction No of Bolts: 8	Suction Bolt Size: 0.875	CAD model unit system: inch/pound		

Xylem Inc.
8200 N. Austin Avenue, Morton Grove, IL 60053
Phone: (847)966-3700 Fax: (847)965-8379
www.bellgossett.com
Bell & Gossett is a trademark of Xylem Inc. or one of its subsidiaries.

Standard Materials of Construction *contact your local rep for optional ES Bearing Frame	
Construction:	Bronze Fitted
Volute:	Cast Iron ASTM A159 with some exceptions
Shaft:	1045 Steel
Shaft Sleeve:	304 SS
Impeller:	Low Zinc Silicon Bronze ASTM B584 Alloy C87600
Impeller Key	Stainless Steel
Retaining Ring	Stainless Steel
Coverplate	Gray Cast Iron
Gland	Gray Cast Iron
Bracket (in & Out)	Gray Cast Iron
Quad Ring	EPDM Rubber
Cap	Gray Cast iron
Water Slinger	Neoprene Rubber
Bearing	Single Row, Ball Bearing with Shield
Lock Washer	Carbon Steel
Lock Nut	Carbon Steel
Lip Seal	Steel with Nitrile Rubber Jacket
Bearing Backup Ring	Stainless Steel
Alignment Friendly Coupling	Non-Spacer, elastomeric
Coupler Guard:	ANSI/OSHA Compliant, Fully Enclosed
Baseplate:	Groutless Reinforced Structural Steel with lifting lugs

Standard Mechanical Seal Assembly	
Elastomer:	EPR
Rotating Face:	Carbon
Stationary Face:	Graphite Loaded Silcon Carbon
Hardware	Stainless Steel/Brass

Maximum Working Pressure	
Max Working Pressure (standard)	175 psi
Max Working Pressure (optional)	300 psi
Max Working Temperature (standard)	300
Max Working Temperature (optional)	225 - 300

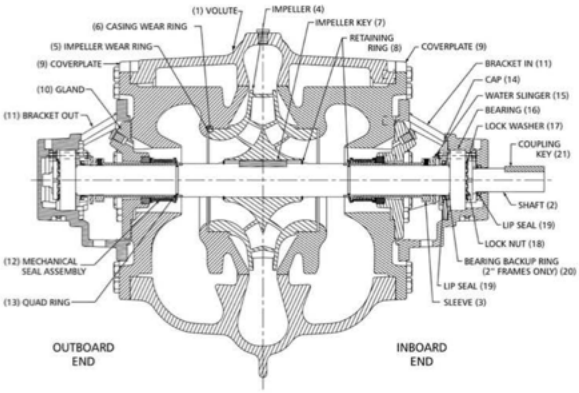

Xylem Inc.
8200 N. Austin Avenue, Morton Grove, IL 60053
Phone: (847)966-3700 Fax: (847)965-8379
www.bellgossett.com
Bell & Gossett is a trademark of Xylem Inc. or one of its subsidiaries.

MAROKO & SHWE, INC.
Consulting Mechanical Engineers

PROP 39 - INDIAN SPRINGS HIGH SCHOOL

HVAC EQUIPMENT CATALOG DATA

MAROKO & SHWE, INC.
Consulting Mechanical Engineers

PROP 39 INDIAN SPRINGS HIGH SCHOOL

HVAC EQUIPMENT CATALOG DATA

Table of Contents

Symbol	Description	Page No.
AHU-1	MULTIZONE VAV AIR HANDLING UNIT	1 - 4
HRU-26/1, HRU-26/2	OUTDOOR VRF HEAT RECOVERY UNIT	5 - 6

AHU-1

| Project Summary

Unit Information								
Unit	Supply CFM	Return CFM	Location	Qty	Base Material	Paint	Color	Voltage
AHU-1	20000	20000	Outdoor	1	Steel	Polyurethane 3mil	Grey	460V / 3 Phase

* To see Cabinet Dimensions and Unit Weight, please refer to Mechanical Drawing.

Fans														Motor				
Unit	Type	Duty	Mfr	Size	Qty	CFM	SP	CL	Fan RPM	Max RPM	BHP	HP	RPM	Manuf.	Type	Eff.(%)	Encl.	Frame Encl.
AHU-1	Optiline Fan	Supply	Energy Labs	245	2	10000	4	2	1736	2199	9.71	15	1800	Reliance	Premium	92.4	TEFC	254T

Coils												
				Physical Data								
Unit	Duty	Manuf.	Fluid	FH (in)	FL (in)	Qty	Rows	FPI	Fin Mat.	Fin Thickn.	Tube	Conn. Size(in)
AHU-1	Direct Expansion	Energy Labs	R410A	35	84	2	6	8	Aluminum	0.006	0.016 Rifled	0.88

Coils (continued)												
	Airside performance								Waterside performance			
Unit	FV fpm	Capacity - Sens.(BTUH)	Capacity - Total (BTUH)	EAT DB	EAT WB	LAT DB	LAT WB	APD	GPM	EWT	LWT	PD
AHU-1	503	-	-	-	-	-	-	-	-	-	-	-

Filters								
Unit	Manuf.	Type	Efficiency	Face Area (Sqft)	FV	Size/Qty	Depth (in)	Class
AHU-1	Flanders	Superflow V Minipleat	85% - MERV 13	48	417	24x24(12)	12	2

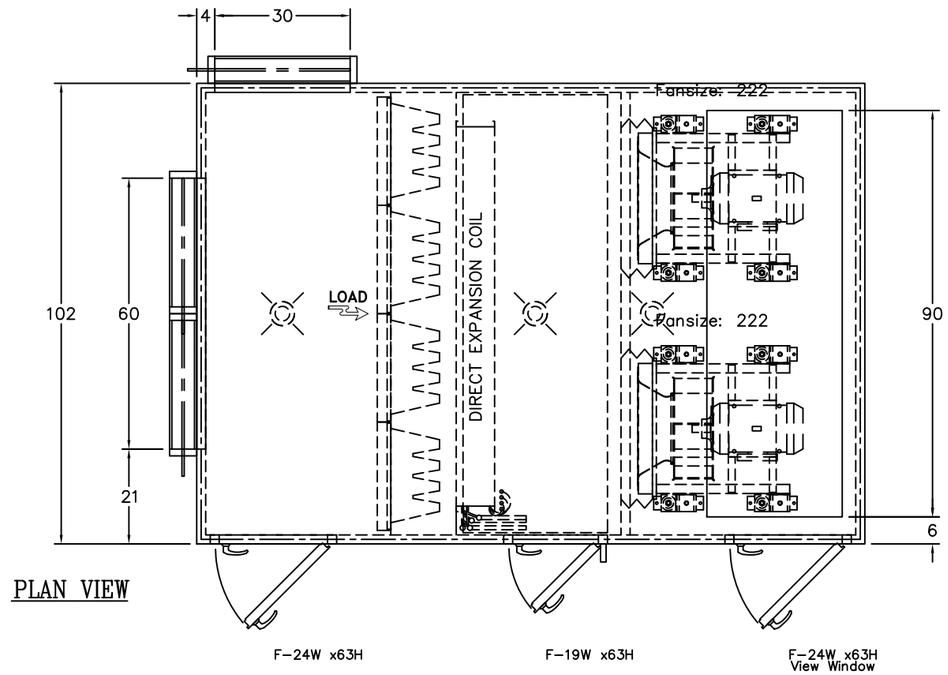

PLAN VIEW

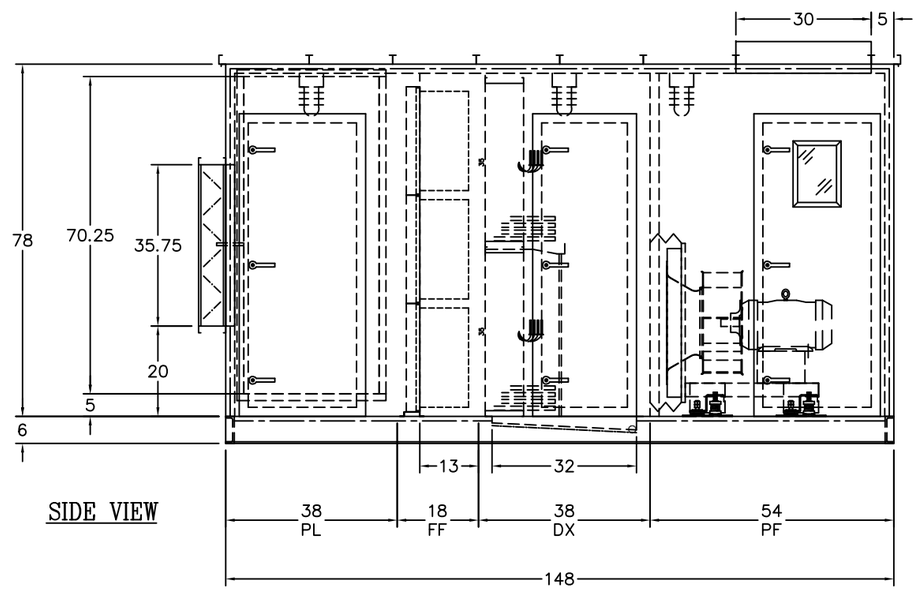

SIDE VIEW

PRELIMINARY MECHANICAL DRAWING
NOT FOR CONSTRUCTION

LEGEND:

OSA = Outside Air	SA = Supply Air
RA = Return Air	EA = Exhaust Air
NS = Near Side	FS = Far Side
HS = High Side	LS = Low Side

SECTIONS:

AB = Air Blender	MB = Mixing Box
CC = Cooling Coil	MS = Moisture Separator
CU = Condensing Unit	MZ = Multizone
DE = Direct Evaporative	PF = Plenum Fan
DF = DWDI Fan	PFF = Pre/Final Filter
DX = DX Coil	PL = Plenum
EC = Economizer	PR = Pre-Filter
FF = Final Filter	SC = Steam Coil
FU = Furnace	ST = Sound Trap
HC = Heating Coil	VF = Vee Filter
IE = Indirect Evaporative	

NOTES:

1. All dimensions are in inches unless otherwise specified.
2. Opening dimension tolerances are ± 0.50, all other cabinet dimension tolerances are ± 1.00.
3. Lifting lug locations on mechanical drawings are for representation only. Actual lifting location will vary depending on Energy Labs Engineering review.

NO.	DATE	REVISION	DWN	APP

PROJECT ENGINEER: Dennis Hucke	2/20/18	
DESIGN ENGINEER:	2/20/18	
DESCRIPTION: MECHANICAL DRAWING		
DRAWING NAME: SU-AHU-1.dwg		
JOB NUMBER: 0		

Energy Labs Inc
1695 CACTUS ROAD
SAN DIEGO, CA 92154
(619) 671-0100

(1) ONE EACH

CFM: 20000/20000

MODEL: C78102-FC-L

JOB NAME: Indian Springs HS

UNIT TAG: AHU-1

| Fan Selection Documents

FAN CURVE

Ver. 6.24 May, 2010

Fan Duty:	SUPPLY	Wheel Type:	ELPF-ALUM
Fan Size:	245	Manufacturer:	ENERGY LABS
Fan Model:	OPTILINE FAN	Maximum RPM:	2199
Fan Class:	2	Qty of Fans:	2
Wheel Width:	100%		

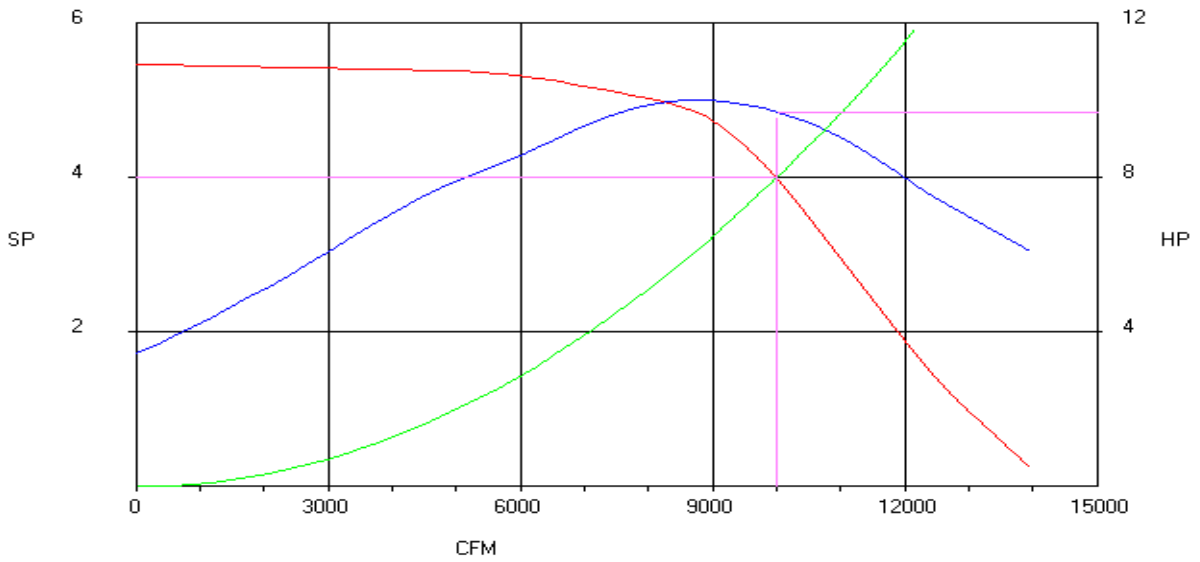

	CFM	SP	BHP	DrHP	RPM	ALT	TEMP	SE
Operating:	10000	4.00	9.71	N/A	1736	150	70	64.8
Standard:		4.02	9.76			0	70	

		63	125	250	500	1K	2K	4K	8K
Sound Power:	**Outlet**	85	88	98	93	89	84	80	79
	Inlet	82	84	95	83	82	80	79	81

- Ratings shown are based on tests and procedures performed in accordance with AMCA Publication 211 and AMCA Publication 311, and comply with the requirements of the AMCA certified ratings program.
- Operating performance and Sound information is for individual fans
- Performance ratings do not include the effect of appurtenances in the airstream
- Performance shown is for installation Type A (free inlet, free outlet)
- The sound power ratings are shown in decibels, referred to 1E-12 watts

| Coil Selection Documents

COIL-1

Date:	02/02/2018	Revision:	0
Manufacturer:	ENERGY LABS	Coil Altitude [FT]:	0
Coil Arrangement (HxW):	2 X 1		

COIL GEOMETRY

Type:	DIRECT EXPANSION	No. of Coils:	2
Construction:	TYPE 'C' - 3/8OD CORR. FIN	No. of Rows:	6
Fin Height:	35	No. of Feeds:	42
Fin Length:	84	No. Of Passes:	4
Fins Per Inch:	8	Conn. Size [in]:	0.88
Fin Thickness:	0.006	Conn. Type	ODS
Fin Material:	ALUMINUM	Connection Matl:	COPPER
Tube Spacing:	1.25 IN. CENTERS		
Tube Size(OD):	3/8		
Tube Wall:	0.016 RIFLED		

AIRSIDE DATA:

SCFM:	20,000
ACFM:	20,527
Total Capacity [BTUH]:	639,816
Sensible Cap [BTUH]:	524,324
Entering DB [DEG F]:	80
Entering WB [DEG F]:	65
Leaving DB [DEG F]:	56.2
Leaving WB [DEG F]:	54.3
Std Face Vel [FPM]:	490
Act Face Vel [FPM]:	503
Pressure Drop [in H2O]:	0.367

TUBESIDE DATA:

Fluid:	R410A
Evap Temp [DEG F]:	45
Liq Temp [DEG F]:	100
Superheat [DEG F]:	10
Ckt Loading[LBS/HR]:	7617
Press. Drop [PSI]:	2.307
Fluid Fouling Factor [h-ft^2-°F/Btu]:	0

ENERGY LABS PART NO: 3DX-0806-35X84-A42/4C

Ver. 1.15.2 Nov. 2014

NOTES:

- Refrigerant coils rated in accordance with AHRI Standard 410, but are not in the ELI certification program. Coil is not certified by AHRI
- Suction connection size is approximate.

Job Name/Location: **Tag #:**

Date:

PO No.:

For: ☐ File ☐ Resubmit ☐ Approval ☐ Other _____

Architect: GC:

Engr: Mech:

Rep:
(Company) (Project Manager)

ARUB312DTE4
Multi V™ IV Heat Recovery
26.0 Ton Outdoor Unit

(a) ARUB072DTE4
(b) ARUB096DTE4
(c) ARUB144DTE4

LG Life's Good

HRU-26/1, HRU-26/2

Performance:

Cooling Mode:

Nominal Capacity (Btu/h)	312,000
Power Input[1] (kW)	19.77

Heating Mode:

Nominal Capacity (Btu/h)	351,000
Power Input[1] (kW)	22.63

Nominal Capacity is outside the scope of AHRI Standard 1230 and based on the following conditions:
Indoor: 80°F DB / 67°F WB Indoor: 70°F DB
Outdoor 95°F DB Outdoor 47°F DB / 43°F WB

Electrical:

	(a) ARUB072DTE4	(b) ARUB096DTE4	(c) ARUB144DTE4[9]
Power Supply (V/Hz/Ø)	460/60/3	460/60/3	460/60/3
MOP (A)	25	35	40
MCA (A)	16.7	23.2	31.6
Rated Amps (A)	13.8	19.1	28.4
Compressor A (A)	11.7	16.5	12.9
Compressor B (A)	-	-	12.9
Fan (A)	2.1	2.6	2.6

Piping:

	(a) ARUB072DTE4	(b) ARUB096DTE4	(c) ARUB144DTE4
Refrigerant Charge (lbs)	16.9	23.6	23.6
Liquid Line[2] (in, OD)	3/8	3/8	1/2
Vapor Line High[2] (in, OD)	5/8	3/4	7/8
Vapor Line Low[2] (in, OD)	3/4	7/8	1-1/8

Standard Features:

- HiPOR (high pressure oil return)
- Smart Oil Control
- Split Frame Defrost
- Night Quiet Operation
- Fault Detection and Diagnosis

Required Accessories:

☐ ARCNB21 (frame connector Y-branch)
☐ ARCNB31 (frame connector Y-branch)

Optional Accessories:

☐ Air Guide - PRAGX2S0 (1), Air Guide - PRAGX3S0 (4)
☐ Hail Guard Kit - ZHGDKA01A (1), Hail Guard Kit - ZHGDKA04A (2)
☐ Low Ambient Baffle Kit - ZLABKA01A (1), Low Ambient Baffle Kit - ZLABKA03A (2), Control Kit - PRVC2 (1 per system)
****(-9.9°F achieved only when all IDU's are operating in cooling mode. Does not impact synchronous operating range.)**

Operating Range:

Cooling (˚F DB)**	14-122
Heating (˚F WB)	-13 - 61
Synchronous	
Cooling Based (˚F DB)	14 – 81
Heating Based (˚F WB)	14 – 61

Unit Data:

Refrigerant Type	R410A
Refrigerant Control	EEV
Max Number of Indoor Units[3]	58
Sound Pressure[4] dB(A)	63.8
Net Unit Weight (a) + (b) + (c) (lbs)	430 + 540 + 628
Shipping Weight (a) + (b) + (c) (lbs)	452 + 573 + 661
Communication Cable[5] (No x AWG)	2 x 18
Heat Exchanger Coating	GoldFin™

Compressor:

Compressor Type	HSS DC Scroll
Compressor Quantity	4
Oil/Type	PVE/FVC68D

Fan:

Type	Propeller
Quantity (a) + (b) + (c)	5
Motor/Drive	Brushless Digitally Controlled/Direct
Air Flow Rate (a) + (b) + (c) (CFM)	27,450

Notes:

1.For AHRI ratings, refer to the AHRI website http://www.ahridirectory.org.
2.For main pipe segment size, refer to the LATS Multi V tree diagram.
3.The combination ratio must be between 50-130%.
4.Sound Pressure levels are tested in an anechoic chamber under ISO Standard 3745 for the combination of outdoor units.
5.All communication cable to be minimum 18 AWG, 2-conductor, stranded, shielded and must comply with applicable local and national code. Cables terminate at each frame.
6.Nominal data is rated 0 ft above sea level, with 25 ft of refrigerant line per indoor unit and a 0 ft level difference between outdoor and indoor units. All capacities are net with a combination ratio between 95-105%.
7.Power wiring cable size must comply with the applicable local and national code. Cables terminate at each frame.
8.The voltage tolerance is 414-528V.9.The order of each of these units on the submittal (i.e., A+B+C) do not represent the installation order. Highest capacity unit is used as the Master, followed by the next smaller size as Slave 1 and so on.

Inverter

Intertek

AHRI CERTIFIED™ www.ahridirectory.org
Variable Refrigerant Flow (VRF) Multi-Split AC and HP AHRI Standard 1230

© LG Electronics U.S.A., Inc., Englewood Cliffs, NJ. All rights reserved. "LG Life's Good" is a registered trademark of LG Corp. /www.lghvac.com

Job Name/Location:

ARUB312DTE4	(a) ARUB072DTE4
Multi V™ IV Heat Recovery	(b) ARUB096DTE4
26.0 Ton Outdoor Unit	(c) ARUB144DTE4

LG Life's Good

Tag #:

Date:

PO No.:

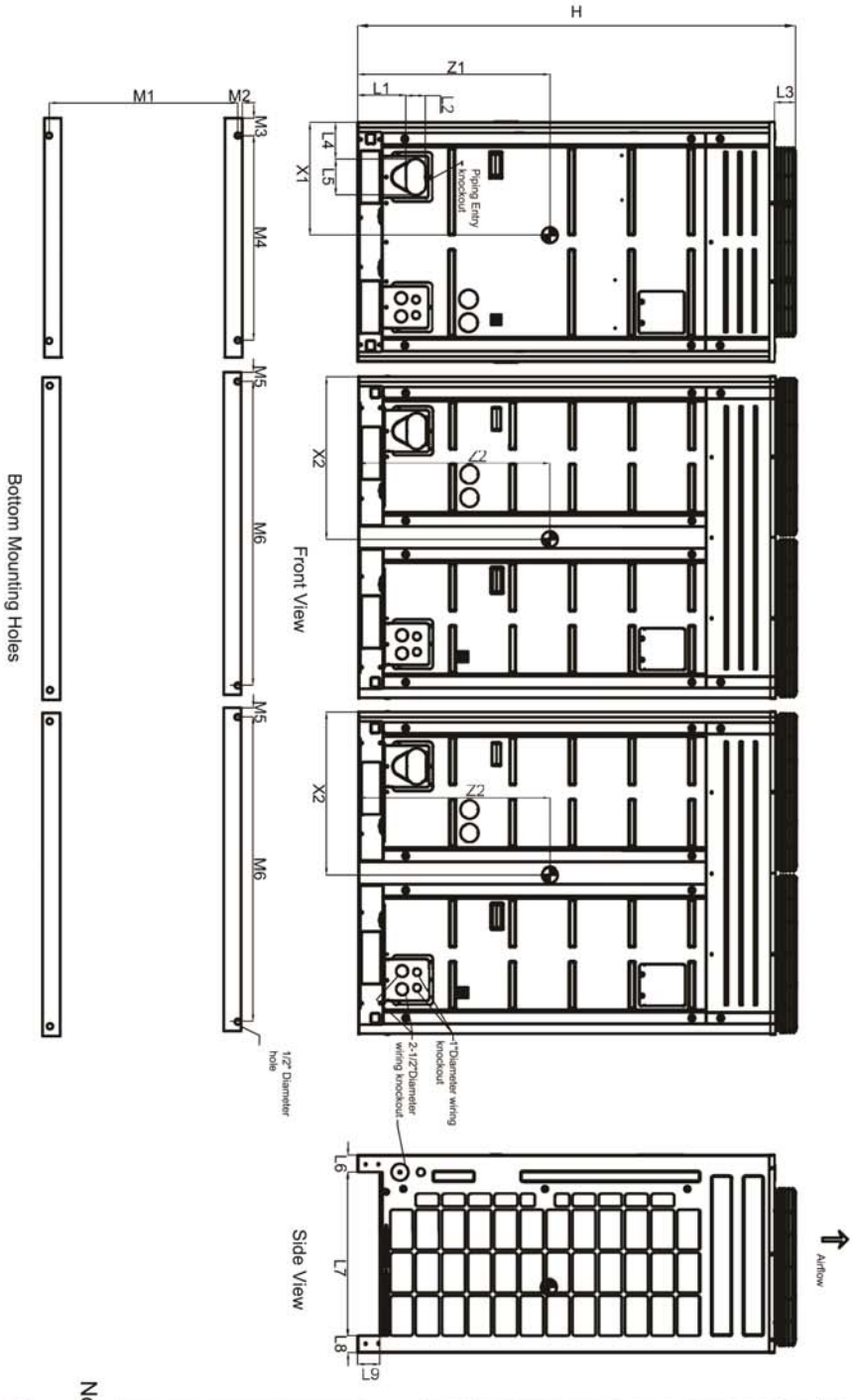

W1	36-1/4"
W2	48-13/16"
D	29-15/16"
H	66-1/8"
L1	7-1/4"
L2	2-15/16"
L3	3-1/8"
L4	5-1/2"
L5	5-3/8"
L6	2-9/16
L7	24-3/16"
L8	2-9/16"
L9	3-5/16"
M1	29-1/16"
M2	7/16"
M3	2-5/8"
M4	31-3/16"
M5	2-5/8"
M6	43-3/8"

Center of Gravity

X1	17-5/8"
X2	24-3/4"
Y1	13-1/2"
Y2	21-9/16"
Z1	29-5/8"
Z2	29-7/8"

Note - All dimensions have a tolerance of ± 0.25 in.

⊕ = Center of Gravity

© LG Electronics U.S.A., Inc., Englewood Cliffs, NJ. All rights reserved. "LG Life's Good" is a registered trademark of LG Corp. /www.lghvac.com

MAROKO & SHWE, INC.
Consulting Mechanical Engineers

PROP 39 – SAN GORGONIO HIGH SCHOOL

HVAC EQUIPMENT CATALOG DATA

MAROKO & SHWE, INC.
Consulting Mechanical Engineers

PROP 39 SAN GORGONIO HIGH SCHOOL

HVAC EQUIPMENT CATALOG DATA

Table of Contents

Symbol	Description	Page No.
CH-1	200 TON WATER COOLED CHILLER	1 - 7
	60 HP VFD	8 - 12

AquaEdge Chiller Configuration

Project Name: 180202- SBUSD - Prop 39 Projects - Cajon HS, San G 02/02/2018
Sales Office: Sigler 02:51 PM

CH-1

Tag Name: 23XRV- 200 T- Selection

Rated with AHRI Standard 550/590 (I-P)

Chiller
- Chiller Model **23XRVA1A2NPHR251-S**
- Starter / VFD ..... **VFD - Unit Mounted (STD Tier)**
- Refrigerant Type **R-134a**

Cooler
- Size **A1**
- Waterbox Type ..... **Nozzle-in-Head, 150 psi**
- Passes **2**
- Nozzle Arrangement . **D (Nozzles on Compressor End)**
- Tubing ..... **Super E3 (SUPE3), .025 in, Copper**
- Fluid Type ..... **Fresh Water**

Compressor
- Size ..... **P (PL Opt.)**
- Economizer ..... **No**

Weights and Approximate Dimensions
- Total Rigging Weight ..... **13793** lb
- Total Operating Weight ..... **14640** lb
- Refrigerant Weight ..... **820** lb
- Length x Width x Height ..... **167.62 x 46.38 x 89.00** in

Condenser
- Size **A2**
- Waterbox Type ..... **Nozzle-in-Head, 150 psi**
- Passes **2**
- Nozzle Arrangement . **S (Nozzles on Compressor End)**
- Tubing ..... **Spike Fin III (SPK3), .025 in, Copper**
- Fluid Type ..... **Fresh Water**

Motor
- Size ..... **H (P comp)**
- Line Voltage/Hertz (VFD Line Side) **460-3-60**
- Oil Pump Voltage/Hertz **120-3-60**

Specified Chiller Options:
- Isolation Valve Package
- Refrigerant Shipment: Shipped in Machine
- Automatic Hot Gas Bypass
- BACnet communication
- Full Factory Acoustic Insulation

Integrated VFD:
- Factory Mounting

CCS Chiller Start Up:
- Included

Warranty:
- One (1) year from start up or eighteen (18) months from shipment, whichever occurs first.
- Five (5) year refrigerant warranty included.
  - ** Please refer to the Refrigerant Warranty Certificate for more details regarding the Refrigerant Warranty **.

Note: This list of specified chiller options does not include any of the separate-ship accessories (gasket kits, refrigerant cylinders, standalone pumpout units, or storage tank / pumpout units), nor any items specified on a Quote Control. These items are specified as part of a bid, and not in the chiller tag. The Pricing Report includes all of these items as specified in a bid.

AquaEdge Chiller Performance Outputs

Project Name: 180202- SBUSD - Prop 39 Projects - Cajon HS, San G 02/02/2018
Sales Office: Sigler 02:51 PM

Tag Name: 23XRV- 200 T- Selection

Rated with AHRI Standard 550/590 (I-P)

Chiller
- Chiller Model **23XRVA1A2NPHR251-**
- Starter / VFD ..... **VFD - Unit Mounted (STD Tier)**
- Refrigerant Type **R-134a**
- Isolation Valve ..... **Installed**
- Automatic Hot Gas Bypass ..... **Installed**
- Operation Type ..... **Cooling**

Cooler
- Size **A1**
- Waterbox Type ..... **Nozzle-in-Head, 150 psi**
- Passes **2**
- Nozzle Arrangement . **D (Nozzles on Compressor End)**
- Tubing ..... **Super E3 (SUPE3), .025 in, Copper**
- Fluid Type ..... **Fresh Water**
- Fouling Factor(hr-sqft-F)/BTU **0.000100**

Compressor
- Size ..... **P (PL Opt.)**
- Economizer ..... **No**

Weights
- Total Rigging Weight ..... **13793** lb
- Total Operating Weight ..... **14640** lb
- Refrigerant Weight ..... **820** lb

Condenser
- Size **A2**
- Waterbox Type ..... **Nozzle-in-Head, 150 psi**
- Passes **2**
- Nozzle Arrangement . **S (Nozzles on Compressor End)**
- Tubing ..... **Spike Fin III (SPK3), .025 in, Copper**
- Fluid Type ..... **Fresh Water**
- Fouling Factor(hr-sqft-F)/BTU **0.000250**

Motor
- Size ..... **H (P comp)**
- Line Voltage/Hertz (VFD Line Side) **460-3-60**

Output Type	Full Load (I-P)	Part Load (I-P)	Part Load (I-P)	Part Load (I-P)
Percent Load	100.00	75.00	50.00	25.00
Chiller Capacity	200.0 tonR	150.0 tonR	100.0 tonR	50.00 tonR
Chiller Input kW	115.4 kW	59.40 kW	28.20 kW	17.80 kW
Chiller Efficiency	0.5771 kW/tonR	0.3957 kW/tonR	0.2819 kW/tonR	0.3562 kW/tonR
Chiller COPR	6.094 kW/kW	8.887 kW/kW	12.48 kW/kW	9.874 kW/kW
NPLV.IP	0.3320 kW/tonR	N/A	N/A	N/A
NPLV.IP (COP)	10.59 kW/kW	N/A	N/A	N/A
Cooler				
Entering Temp.	54.00 F	51.99 F	49.99 F	48.00 F
Leaving Temp.	46.00 F	46.00 F	46.00 F	46.00 F
Flow Rate	599.5 gpm	599.5 gpm	599.5 gpm	599.5 gpm
Pressure Drop	26.7 ft H2O	26.8 ft H2O	26.9 ft H2O	27.0 ft H2O
Condenser				
Leaving Temp.	94.34 F	81.68 F	69.31 F	67.17 F
Entering Temp.	85.00 F	75.00 F	65.00 F	65.00 F
Flow Rate	600.0 gpm	600.0 gpm	600.0 gpm	600.0 gpm
Pressure Drop	14.9 ft H2O	15.3 ft H2O	15.7 ft H2O	15.7 ft H2O
Motor				
Motor Rated Load Amps	175.2	136.8	112.5	124.7
Chiller Rated Line Amps	172	104	55	35
Chiller Inrush Amps	172			
Max Fuse/CB Amps	350			
Min Circuit Ampacity	216			

Messages:

AquaEdge Chiller Estimated Acoustic Data

Project Name: 180202- SBUSD - Prop 39 Projects - Cajon HS, San G 02/02/2018
Sales Office: Sigler 02:51 PM

Tag Name ..... **23XRV- 200 T- Selection**
Chiller Model **23XRVA1A2NPHR251-**
Sound Treatment ..... **Full Factory Acoustic Insulation**

Airborne Sound Pressure, dB

Percent Load	DBA
100	**86**
75	**78**
50	**77**
25	**77**

The full load and part load DBA values are accurate according to Engineering Data Release.

Notes:

Estimated Sound Pressure Levels - dB re: 20 micropascal.

Sound pressure levels used to develop this program were measured per AHRI Standard 575.

The sound pressure levels were measured in an acoustical free-field, i.e. a non-reflective environment. Field sound measurements can vary significantly as a function of the reflectivity and proximity of nearby surfaces and the presence of other sound sources.

Octave band sound pressure level data, for each of the above specified loads, are available upon request.

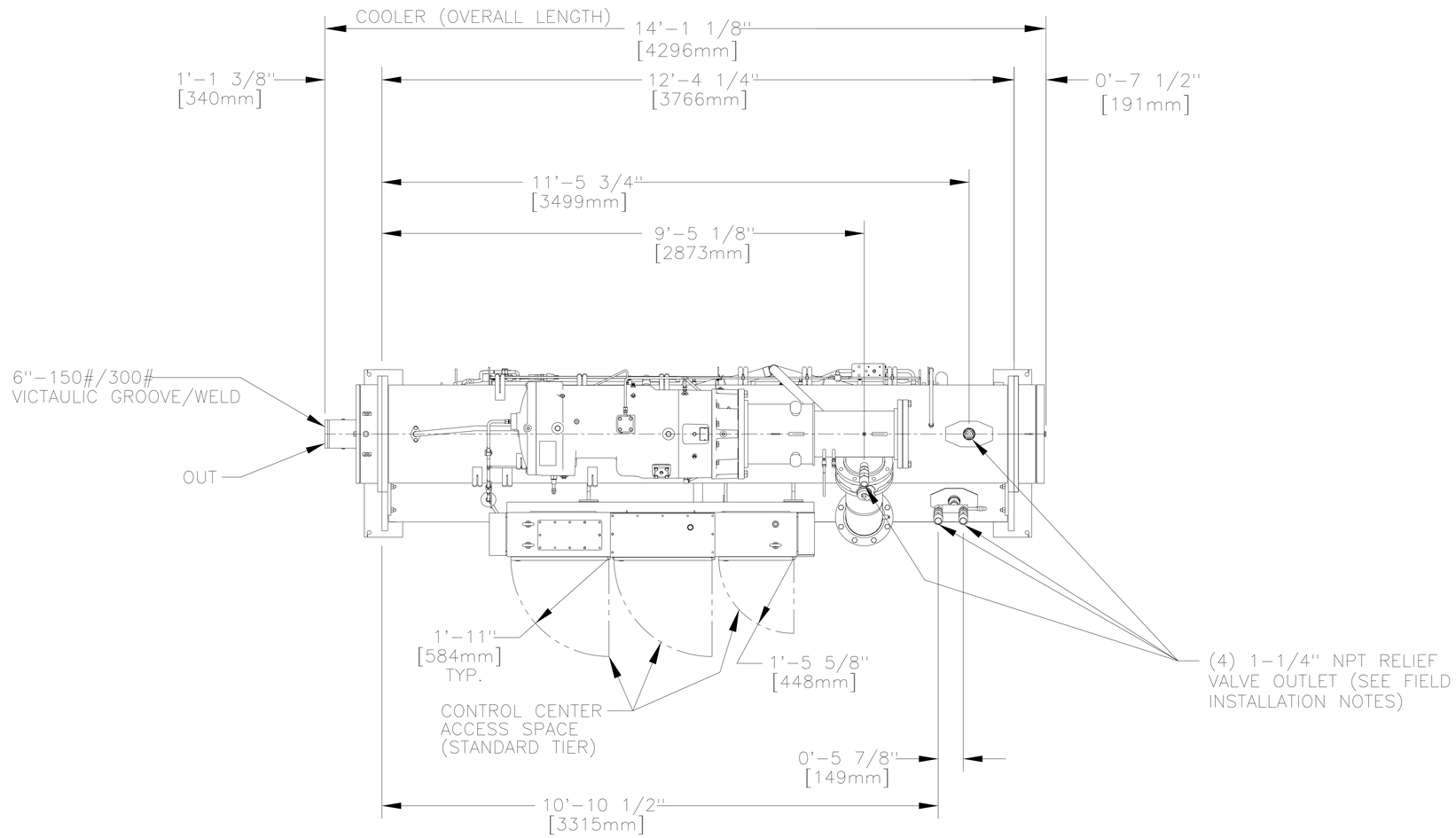

SUCTION END

PLAN VIEW

DISCHARGE END

NOTE: CONDENSER WATER BOXES NOT SHOWN FOR CLARITY.
SEE FRONT, REAR, SUCTION END AND DISCHARGE END VIEWS
FOR DIMENSIONAL INFORMATION.

HEAT EXCHANGERS 23XRA1-A6						MACHINE OPTIONS		
COOLER					CONDENSER			
PASS	NOZZLE CODE	PRESSURE	W/B COVER WT. DISCHARGE END	W/B COVER WT. SUCTION END		ISOLATION VALVE	HOT GAS BYPASS	ECONOMIZER
2	D	150/300 PSIG	333 LBS. [151 KG.]	232 LBS. [105 KG.]		✓	✓	--

NOTES:

1. TOLERANCES ON NOZZLE LOCATIONS AND OVERALL DIMENSIONS ARE ± 1" [25mm].
2. CARRIER DOES NOT RECOMMEND PRE-FAB WATER PIPING.
3. FOR VICTAULIC GROOVE DETAIL SEE DRAWING 19XR14VG.
4. ✓ DENOTES APPLICABLE CONDITIONS
5. IF HINGED WATERBOXES ARE INCLUDED, THE HINGES ARE NOT SHOWN ON THIS DRAWING AND MAY CHANGE THE MACHINE OVERALL LENGTH AND WIDTH. PLEASE CONSULT THE HINGED WATERBOX DRAWING FOR MORE DETAILS.

Carrier
A United Technologies Company
P.O. BOX 4808, SYRACUSE, N.Y. 13221

JOB NAME:
180202- SBUSD - Prop 39

BUYER:

SALES ENG.:
Samuel Andrew

MODEL NO.:
23XRVA1A2NPHR251-

JOB NO.:

P.O. NO.:

PREPARED BY:

ELECTRICAL CHARACTERISTICS:
460/3/60

JOBSITE LOCATION:

SALES OFFICE:
Sigler

REFRIGERANT NO.:
R-134a

NOTES:

COMP'R: TP
COOLER: 23XRA1-A6
COND'R: 23XRA1-A6
MACHINE ASSEMBLY
PLAN VIEW

DATE: 2/2/2018

REVISION: ___

THIS DOCUMENT IS THE PROPERTY OF CARRIER CORP. AND IS DELIVERED UPON THE EXPRESS CONDITION THAT THE CONTENTS WILL NOT BE DISCLOSED OR USED WITHOUT CARRIER CORP. WRITTEN CONSENT.

SUBMISSION OF THESE DWG'S. OR DOCUMENTS DOES NOT CONSTITUTE PART PERFORMANCE OR ACCEPTANCE OF CONTRACT.

CARRIER DWG # 23XRA1TP-P
REV. D SHT 01 OF 01
DATE: 6/20/2017
SUPERSEDES DWG. DATED:
5/5/2017

23XRTP-12

SHT 1 OF 4

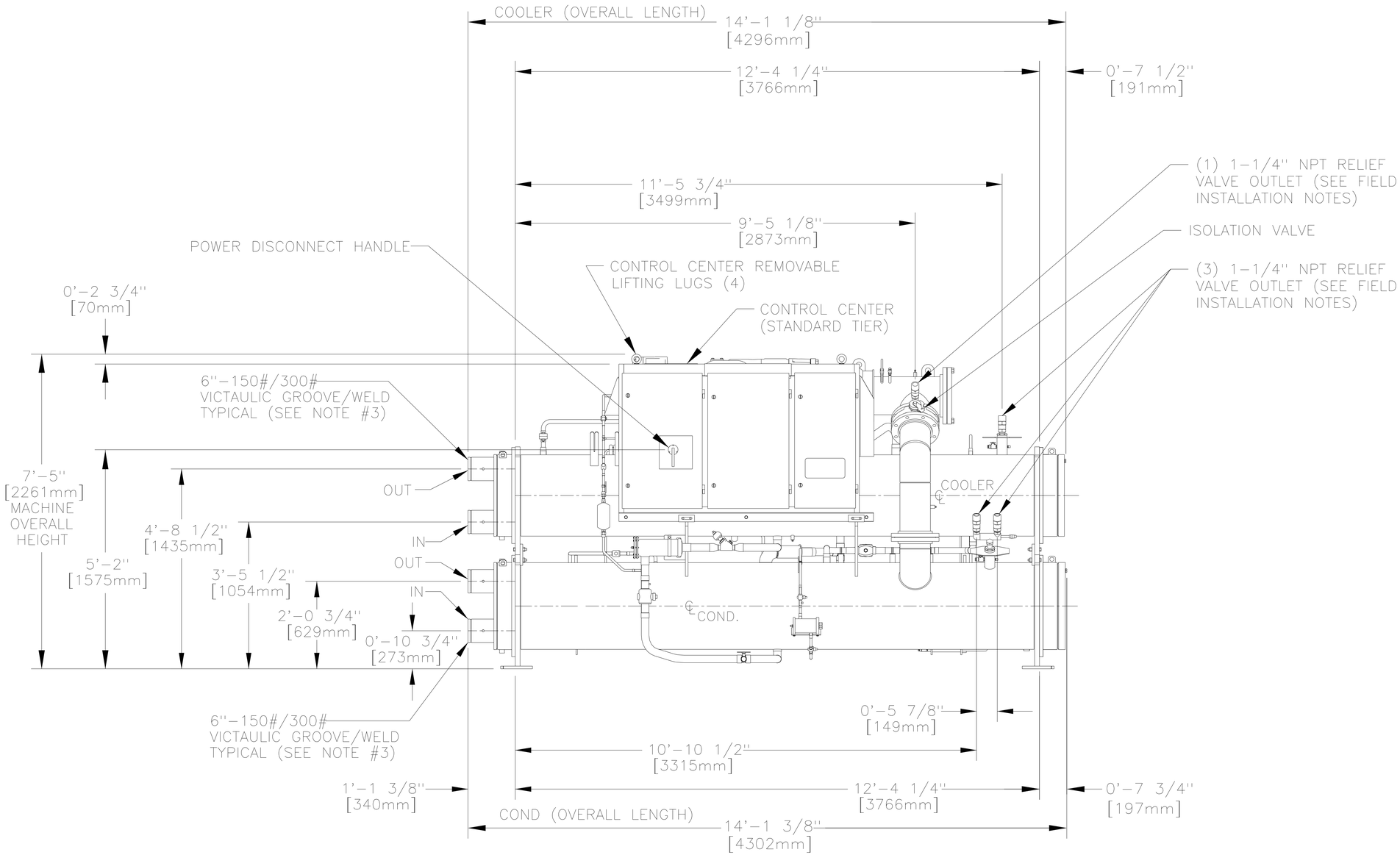

HEAT EXCHANGERS 23XRA1-A6										MACHINE OPTIONS		
COOLER					CONDENSER							
PASS	NOZZLE CODE	PRESSURE	W/B COVER WT. DISCHARGE END	W/B COVER WT. SUCTION END	PASS	NOZZLE CODE	PRESSURE	W/B COVER WT. DISCHARGE END	W/B COVER WT. SUCTION END	ISOLATION VALVE	HOT GAS BYPASS	ECONOMIZER
2	D	150/300 PSIG	333 LBS. [151 KG.]	232 LBS. [105 KG.]	2	S	150/300 PSIG	406 LBS. [184 KG.]	265 LBS. [120 KG.]	✓	✓	--

NOTES:

1. TOLERANCES ON NOZZLE LOCATIONS AND OVERALL DIMENSIONS ARE ± 1" [25mm].
2. CARRIER DOES NOT RECOMMEND PRE-FAB WATER PIPING.
3. FOR VICTAULIC GROOVE DETAIL SEE DRAWING 19XR14VG.
4. ✓ DENOTES APPLICABLE CONDITIONS
5. IF HINGED WATERBOXES ARE INCLUDED, THE HINGES ARE NOT SHOWN ON THIS DRAWING AND MAY CHANGE THE MACHINE OVERALL LENGTH AND WIDTH. PLEASE CONSULT THE HINGED WATERBOX DRAWING FOR MORE DETAILS.

Carrier
A United Technologies Company
P.O. BOX 4808, SYRACUSE, N.Y. 13221

JOB NAME: 180202- SBUSD - Prop 39

BUYER:

SALES ENG.: Samuel Andrew

MODEL NO.: 23XRVA1A2NPHR251-

JOB NO.:

P.O. NO.:

PREPARED BY:

ELECTRICAL CHARACTERISTICS: 460/3/60

JOBSITE LOCATION:

SALES OFFICE: Sigler

REFRIGERANT NO.: R-134a

NOTES:

COMP'R: TP
COOLER: 23XRA1-A6
COND'R: 23XRA1-A6
MACHINE ASSEMBLY
FRONT VIEW

DATE: 2/2/2018

REVISION: ___

THIS DOCUMENT IS THE PROPERTY OF CARRIER CORP. AND IS DELIVERED UPON THE EXPRESS CONDITION THAT THE CONTENTS WILL NOT BE DISCLOSED OR USED WITHOUT CARRIER CORP. WRITTEN CONSENT.

SUBMISSION OF THESE DWG'S. OR DOCUMENTS DOES NOT CONSTITUTE PART PERFORMANCE OR ACCEPTANCE OF CONTRACT.

CARRIER DWG # 23XRA1TP-F
REV. D SHT 01 OF 01
DATE: 6/20/2017
SUPERSEDES DWG. DATED: 5/5/2017

23XRTP-12

SHT 2 OF 4

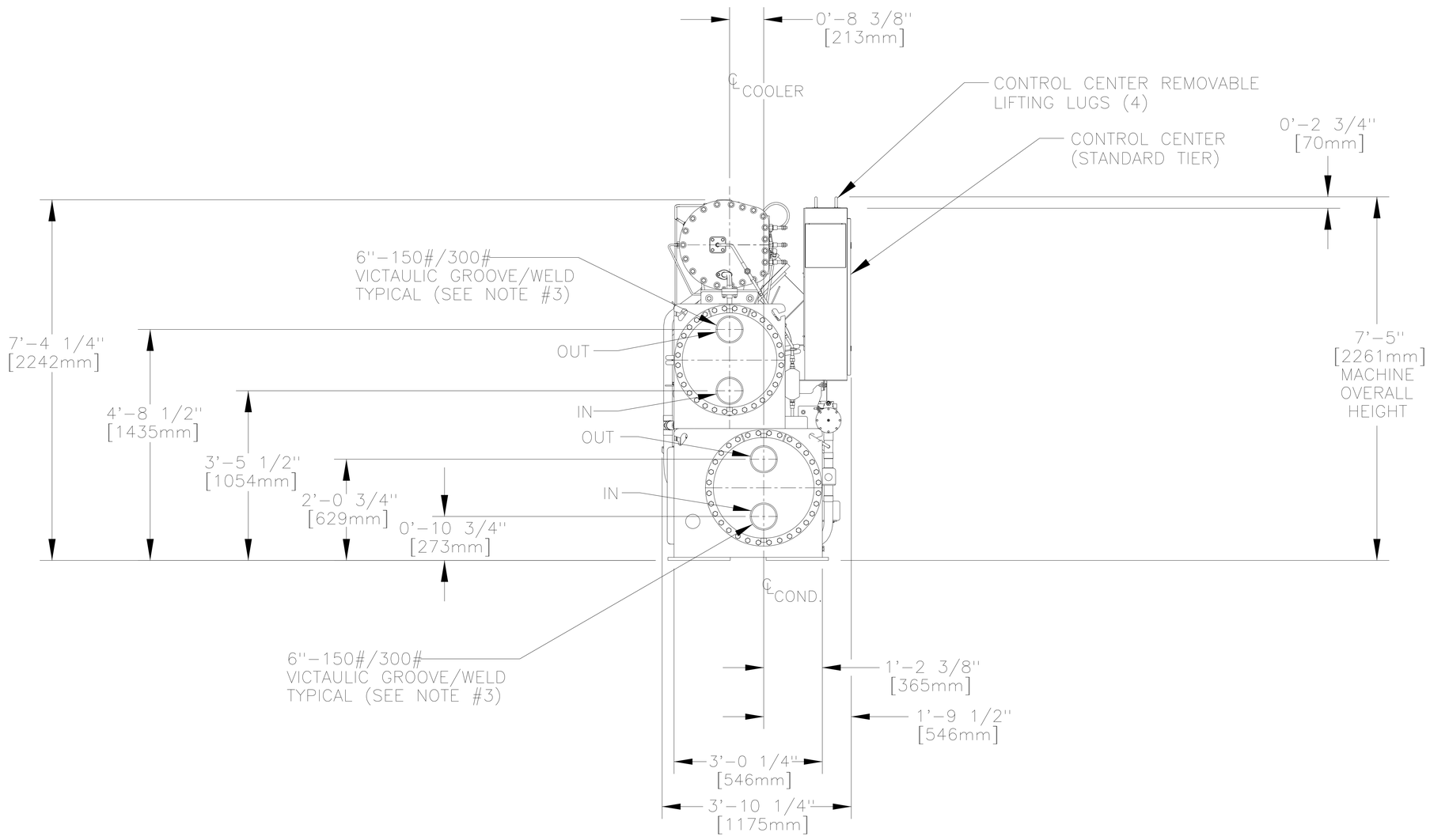

SUCTION END VIEW

HEAT EXCHANGERS 23XRA1-A6										MACHINE OPTIONS		
COOLER					CONDENSER							
PASS	NOZZLE CODE	PRESSURE	W/B COVER WT. DISCHARGE END	W/B COVER WT. SUCTION END	PASS	NOZZLE CODE	PRESSURE	W/B COVER WT. DISCHARGE END	W/B COVER WT. SUCTION END	ISOLATION VALVE	HOT GAS BYPASS	ECONOMIZER
2	D	150/300 PSIG	333 LBS. [151 KG.]	232 LBS. [105 KG.]	2	S	150/300 PSIG	406 LBS. [184 KG.]	265 LBS. [120 KG.]	✓	✓	--

NOTES:

1. TOLERANCES ON NOZZLE LOCATIONS AND OVERALL DIMENSIONS ARE ± 1" [25mm].
2. CARRIER DOES NOT RECOMMEND PRE-FAB WATER PIPING.
3. FOR VICTAULIC GROOVE DETAIL SEE DRAWING 19XR14VG.
4. ✓ DENOTES APPLICABLE CONDITIONS
5. IF HINGED WATERBOXES ARE INCLUDED, THE HINGES ARE NOT SHOWN ON THIS DRAWING AND MAY CHANGE THE MACHINE OVERALL LENGTH AND WIDTH. PLEASE CONSULT THE HINGED WATERBOX DRAWING FOR MORE DETAILS.

Carrier
A United Technologies Company
P.O. BOX 4808, SYRACUSE, N.Y. 13221

JOB NAME:
180202- SBUSD - Prop 39

BUYER:

SALES ENG.:
Samuel Andrew

MODEL NO.:
23XRVA1A2NPHR251-

JOB NO.:

P.O. NO.:

PREPARED BY:

ELECTRICAL CHARACTERISTICS:
460/3/60

JOBSITE LOCATION:

SALES OFFICE:
Sigler

REFRIGERANT NO.:
R-134a

NOTES:

COMP'R: TP
COOLER: 23XRA1-A6
COND'R: 23XRA1-A6
MACHINE ASSEMBLY
SUCTION END VIEW

DATE: 2/2/2018

REVISION: ___

THIS DOCUMENT IS THE PROPERTY OF CARRIER CORP. AND IS DELIVERED UPON THE EXPRESS CONDITION THAT THE CONTENTS WILL NOT BE DISCLOSED OR USED WITHOUT CARRIER CORP. WRITTEN CONSENT.

SUBMISSION OF THESE DWG'S. OR DOCUMENTS DOES NOT CONSTITUTE PART PERFORMANCE OR ACCEPTANCE OF CONTRACT.

CARRIER DWG # 23XRA1TP-D
REV. D SHT 01 OF 01
DATE: 6/20/2017
SUPERSEDES DWG. DATED: 5/5/2017

23XRTP-12

SHT 3 OF 4

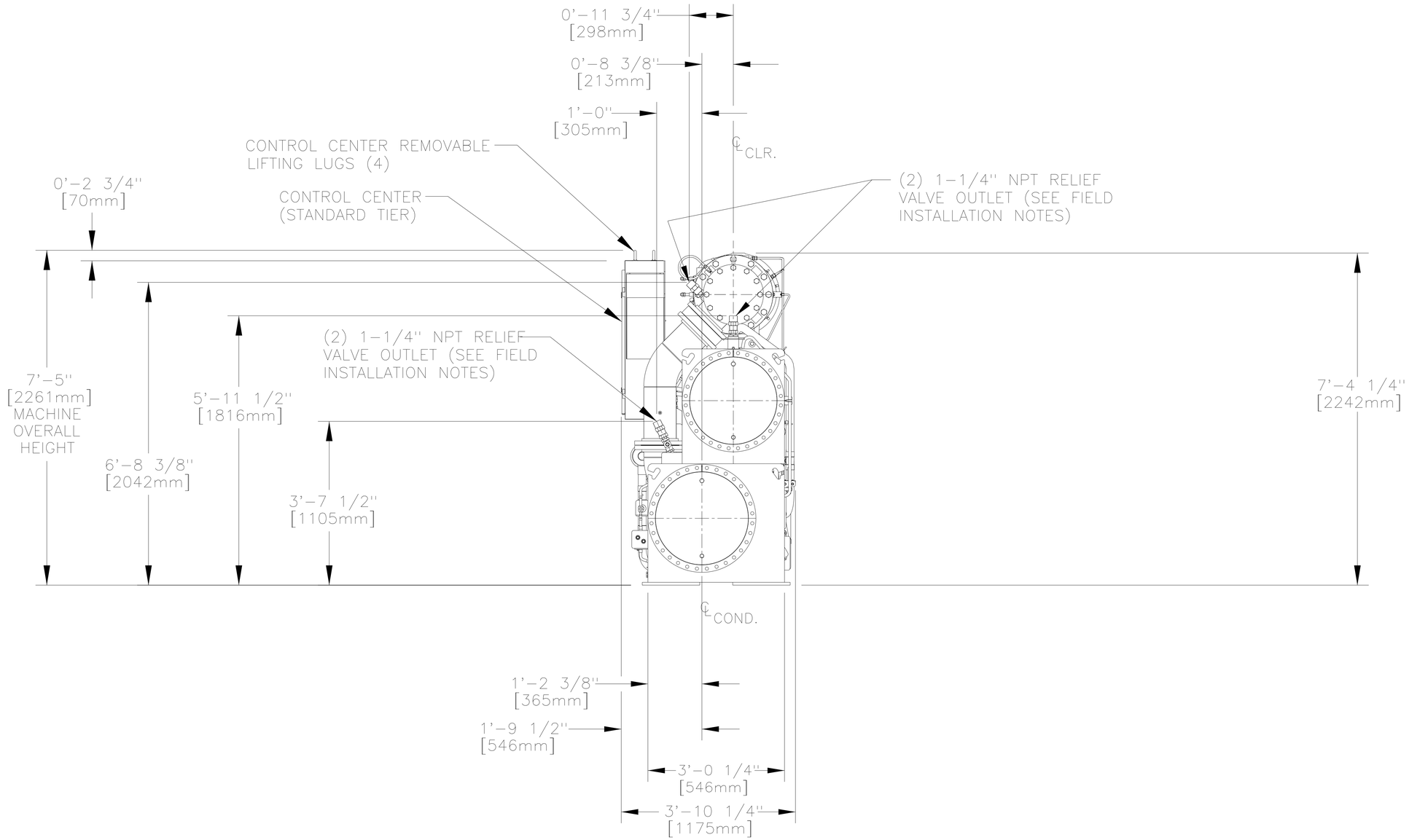

DISCHARGE END VIEW

HEAT EXCHANGERS 23XRA1-A6										MACHINE OPTIONS		
COOLER					CONDENSER							
PASS	NOZZLE CODE	PRESSURE	W/B COVER WT. DISCHARGE END	W/B COVER WT. SUCTION END	PASS	NOZZLE CODE	PRESSURE	W/B COVER WT. DISCHARGE END	W/B COVER WT. SUCTION END	ISOLATION VALVE	HOT GAS BYPASS	ECONOMIZER
2	D	150/300 PSIG	333 LBS. [151 KG.]	232 LBS. [105 KG.]	2	S	150/300 PSIG	406 LBS. [184 KG.]	265 LBS. [120 KG.]	✓	✓	--

NOTES:

1. TOLERANCES ON NOZZLE LOCATIONS AND OVERALL DIMENSIONS ARE ± 1" [25mm].
2. CARRIER DOES NOT RECOMMEND PRE-FAB WATER PIPING.
3. FOR VICTAULIC GROOVE DETAIL SEE DRAWING 19XR14VG.
4. ✓ DENOTES APPLICABLE CONDITIONS
5. IF HINGED WATERBOXES ARE INCLUDED, THE HINGES ARE NOT SHOWN ON THIS DRAWING AND MAY CHANGE THE MACHINE OVERALL LENGTH AND WIDTH. PLEASE CONSULT THE HINGED WATERBOX DRAWING FOR MORE DETAILS.

Carrier
A United Technologies Company
P.O. BOX 4808, SYRACUSE, N.Y. 13221

JOB NAME: 180202- SBUSD - Prop 39

BUYER:

SALES ENG.: Samuel Andrew

MODEL NO.: 23XRVA1A2NPHR251-

JOB NO.:

P.O. NO.:

PREPARED BY:

ELECTRICAL CHARACTERISTICS: 460/3/60

JOBSITE LOCATION:

SALES OFFICE: Sigler

REFRIGERANT NO.: R-134a

NOTES:

COMP'R: TP
COOLER: 23XRA1-A6
COND'R: 23XRA1-A6
MACHINE ASSEMBLY
DISCHARGE END VIEW

DATE: 2/2/2018

REVISION: ___

THIS DOCUMENT IS THE PROPERTY OF CARRIER CORP. AND IS DELIVERED UPON THE EXPRESS CONDITION THAT THE CONTENTS WILL NOT BE DISCLOSED OR USED WITHOUT CARRIER CORP. WRITTEN CONSENT.

SUBMISSION OF THESE DWG'S. OR DOCUMENTS DOES NOT CONSTITUTE PART PERFORMANCE OR ACCEPTANCE OF CONTRACT.

CARRIER DWG # 23XRA1TP-C
REV. D SHT 01 OF 01
DATE: 6/20/2017
SUPERSEDES DWG. DATED: 5/5/2017

23XRTP-12

SHT 4 OF 4

Bell & Gossett
a xylem brand

60 HP VFD

SUBMITTAL
B-551D

JOB: **REPRESENTATIVE:**

UNIT TAG: **ORDER NO.** **DATE:**
ENGINEER: **SUBMITTED BY:** **DATE:**
CONTRACTOR: **APPROVED BY:** **DATE:**

Technologic® Intelligent Pump Controller

TECHNOLOGIC STANDARD FEATURES	
CONTROL METHOD	Constant Pressure, Linear Control Curve, Quadratic Control Curve, Factory configured for sensorless operation (optional). Field configurable for use with a wired transducer.
STARTUP GENIE	Quick start for programming hydraulic specific applications and pump protections.
ENCLOSURE	UL Type ☐1 ☐12 ☐3R ☐4X (Bypass has type 1 and 12 only)
POWER DISCONNECT SWITCH	☐ Standard Disconnect ☐ Fused Disconnect Switch (Fused Disconnect Switch is standard for Drive-Byspass and 150-600HP Drive)
EMI/RFI CONTROL	Integrated filter to meet EN62800-3.
HARMONIC SUPPRESSION	Integrated non-saturating dual DC link reactors provide better harmonic performance than a 5% AC line reactor.
COOLING	Fan-cooled through temperature controlled and easy replacement.
AMBIENT TEMPERATURE RATING	14°F to 113°F (-10°C to 45° C)
COMMUNICATION PROTOCOLS	BACnet, Modbus RTU, N2 Metasys as standard
ANALOG INPUTS	1 configurable for either voltage (0 to 10VDC) or current (0/4 to 20mA) and 1 current (0/4 to 20mA).
ANALOG OUTPUTS	1 (0/4 to 20mA) up to 500 ohm load accurate to 1% of full scale
DIGITAL INPUTS	4 (0 to 24VDC), NPN or PNP, 0 to 24VDC, on 5 msec scan interval, Up to 2 can be configured as pulse inputs.
DIGITAL OUTPUTS	2 (0 to 24VDC), 40mA max current, configurable as pulse outputs.
RELAY OUTPUTS	2 programmable, 240VAC or 400VAC up to 2 A
BYPASS OPTION	☐ None ☐ Drive-Bypass, 3 Contactor, 100 KA SCCR, Electronic Control, Fused Disconnect Switch

200 - 240VAC 1 Phase Mains Drive			
HP	Output Current	TYPE 1 Frame	TYPE 12/3R/4X Frame
1.5	6.6	A5	A5
2	7.5	B1	B1
3	10.6	B1	B1
5	16.7	B1	B1
7.5	24.2	B1	B1
10	30.8	B2	B2
20	59.4	C1	C1
30	88	C2	C2

200 - 240 VAC 3 Phase Mains Drive 208 / 230 VAC 3 Phase Mains Drive-Bypass							
HP	Output Current (A)		TYPE 1 Frame		TYPE 12 Frame		TYPE 3R/4X Frame
	Drive 200-240 VAC	Drive-Bypass 208/230 VAC	Drive 200-240 VAC	Drive-Bypass 208/230 VAC	Drive 200-240 VAC	Drive-Bypass 208/230 VAC	Drive 200-240 VAC
0.5	N/A	2.4/2.2	N/A	A2	N/A	A5	N/A
0.75	N/A	3.5/3.2	N/A	A2	N/A	A5	N/A
1	N/A	4.6/4.2	N/A	A2	N/A	A5	N/A
1.5	6.6	6.6/6	A2	A2	A5	A5	A5
2	7.5	7.5/6.8	A2	A2	A5	A5	A5
3	10.6	10.6/9.6	A2	A2	A5	A5	A5
5	16.7	16.7/15.2	A3	A3	A5	A5	A5
7.5	24.2	24.2/22	B1	B3	B1	B1	B1
10	30.8	30.8/28	B1	B3	B1	B1	B1
15	46.2	46.2/42	B1	B3	B1	B2	B1
20	59.4	59.4/54.0	B2	B4	B2	B2	B2
25	74.8	74.8/68	C1	C3/B4	C1	C1	C1
30	88	88/80	C1	C3	C1	C1	C1
40	115	114/104	C1	C3	C1	C2	C1
50	143	143/130	C2	C4	C2	C2	C2
60	170	169/154	C2	C4	C2	C2	C2

380 - 480 VAC 3 Phase Mains Drive 460 VAC 3 Phase Mains Drive-Bypass							
HP	Output Current (A)		TYPE 1 Frame		TYPE 12 Frame		TYPE 3R/4X Frame
	Drive 380-480 VAC	Drive-Bypass 460 VAC	Drive 380-480 VAC	Drive-Bypass 460 VAC	Drive 380-480 VAC	Drive-Bypass 460 VAC	Drive 380-480 VAC
0.5	N/A	1.1	N/A	A2	N/A	A5	N/A
0.75	N/A	1.6	N/A	A2	N/A	A5	N/A
1	N/A	2.1	N/A	A2	N/A	A5	N/A
1.5	2.7	3	A2	A2	A5	A5	A5
2	3.4	3.4	A2	A2	A5	A5	A5
3	4.8	4.8	A2	A2	A5	A5	A5
5	8.2	7.6	A2	A2	A5	A5	A5
7.5	11	11	A3	A2	A5	A5	A5
10	14.5	14	A3	A2	A5	A5	A5
15	21	21	B1	B3	B1	B1	B1
20	27	27	B1	B3	B1	B1	B1
25	34	34	B1	B3	B1	B1	B1
30	40	40	B2	B4	B2	B2	B2
40	52	52	B2	B4	B2	B2	B2
50	65	65	C1	B4	C1	C1	C1
60	80	77	C1	C3	C1	C1	C1
75	105	96	C1	C3	C1	C1	C1
100	130	124	C2	C4	C2	C2	C2
125	160	156	C2	C4	C2	C2	C2

380 - 480 VAC 3 Phase Mains Drive 460 VAC 3 Phase Mains Drive-Bypass					
HP	Output Current (A)	E00/E20	TYPE 1 Frame	TYPE 12 Frame	TYPE 3R Frame
	Drive 380-480 VAC	Drive 380-480 VAC	Drive 380-480 VAC	Drive 380-480 VAC	Drive 380-480 VAC
150	190	D3h	D5h	D5h	D1h
200	240	D3h	D5h	D5h	D1h
250	302	D3h	D5h	D5h	D1h
300	361	D4h	D7h	D7h	D2h
350	443	D4h	D7h	D7h	D2h
450	535	D4h	D7h	D7h	D2h
500	590	E2	E1	E1	N/A
550	678	E2	E1	E1	N/A
600	730	E2	E1	E1	N/A

525 - 600 VAC 3 Phase Mains Drive 600 VAC 3 Phase Mains Drive-Bypass							
HP	Output Current (A)		TYPE 1 Frame		TYPE 12 Frame		TYPE 3R/4X Frame
	Drive 525-600 VAC	Drive-Bypass 600 VAC	Drive 525-600 VAC	Drive-Bypass 600 VAC	Drive 525-600 VAC	Drive-Bypass 600 VAC	Drive 525-600 VAC
0.5	N/A	0.9	N/A	A3	N/A	A5	N/A
0.75	N/A	1.3	N/A	A3	N/A	A5	N/A
1	N/A	1.7	N/A	A3	N/A	A5	N/A
1.5	2.4	2.4	A3	A3	A5	A5	A5
2	2.7	2.7	A3	A3	A5	A5	A5
3	3.9	3.9	A3	A3	A5	A5	A5
5	6.1	6.1	A3	A3	A5	A5	A5
7.5	9	9	A3	A3	A5	A5	A5
10	11	11	A3	A3	A5	A5	A5
15	18	17	B1	B3	B1	B1	B1
20	22	22	B1	B3	B1	B1	B1
25	27	27	B1	B3	B1	B1	B1
30	34	32	B2	B4	B2	B2	B2
40	41	41	B2	B4	B2	B2	B2
50	52	52	C1	B4	B2	C1	B2
60	62	62	C1	C3	C1	C1	C1
75	83	77	C1	C3	C1	C1	C1
100	100	99	C2	C4	C2	C2	C2
125	131	125	C2	C4	C2	C2	C2

525 - 600 VAC 3 Phase Mains Drive 600 VAC 3 Phase Mains Bypass					
HP	Output Current (A)	E00/E20	TYPE 1 Frame	TYPE 12 Frame	TYPE 3R Frame
	Drive 525-600 VAC	Drive 525-600 VAC	Drive 525-600 VAC	Drive 525-600 VAC	Drive 525-600 VAC
150	155	D3h	D5h	D5h	D1h
200	192	D3h	D5h	D5h	D1h
250	242	D3h	D5h	D5h	D1h
300	290	D4h	D7h	D7h	D2h
350	344	D4h	D7h	D7h	D2h
400	N/A	N/A	N/A	N/A	N/A
450	450	D4h	D7h	D7h	D2h
500	590	E2	E1	E1	N/A
600	570	E2	E1	E1	N/A

Drive Drawings and Specification Table

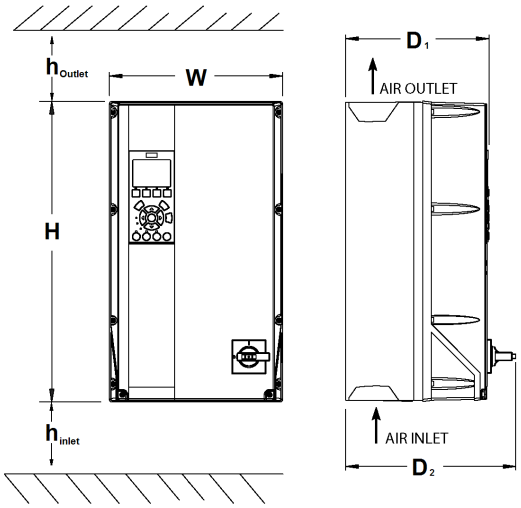

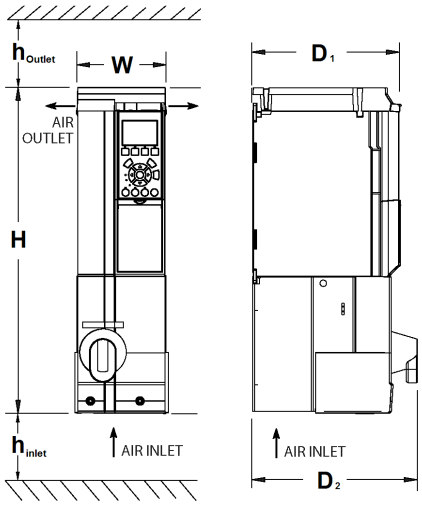

Frame Size	Nominal Weight lbs/Kg	Enclosure Rating		Dimensions					
		TYPE 1	TYPE 12	**H** inches/mm	**W** inches/mm	**D1** inches/mm	**D2** inches/mm	**h inlet** inches/mm	**h outlet** inches/mm
A2[1]	10.8/4.9	X		19.1/485	5.2/132	8.7/222	9.6/245	3.9/100	3.9/100
A3[1]	14.6/6.6	X		19.1/485	5.2/132	8.2/207	9.6/245	3.9/100	3.9/100
A5	31.3/14.2		X	16.5/420	9.5/242	7.9/200	9.4/238	3.9/100	3.9/100
B1	51/23	X	X	18.9/480	9.5/242	10.2/260	12/304	3.9/100	3.9/100
B2	60/27	X	X	25.6/650	9.5/242	10.2/260	12/304	3.9/100	3.9/100
C1	99/45	X	X	26.9/680	12.1/308	12.2/310	14.1/358	7.9/200	7.9/200
C2	143/65	X	X	30.2/770	14.6/370	13/335	14.9/393	8.9/225	8.9/225

Frame Size	Nominal Weight lbs/Kg	Enclosure Rating		Dimensions					
		TYPE 1	TYPE 12	**H** inches/mm	**W** inches/mm	**D1** inches/mm	**D2** inches/mm	**h inlet** inches/mm	**h outlet** inches/mm
D1	229.3/104	X	X	47.6/1209	16.54/420	14.96/380	16.4/417	8.9/225	8.9/225
D2	332.9/151	X	X	62.56/1589	16.54/420	14.96/380	16.4/417	8.9/225	8.9/225
D3	200.62/91	X	X	41.18/1046	16.06/408	14.76/375	16.4/417	8.9/225	8.9/225
D4	304.24/138	X	X	52.24/1327	16.06/408	14.76/375	16.4/417	8.9/225	8.9/225
D5	255/116	X	X	52.13/1324	12.8/325	15/381	16.3/416	8.9/225	8.9/225
D7	440/200	X	X	77.87/1978	16.54/420	15.2/386	16.5/418	8.9/225	8.9/225

Bypass Drawings and Specification Table

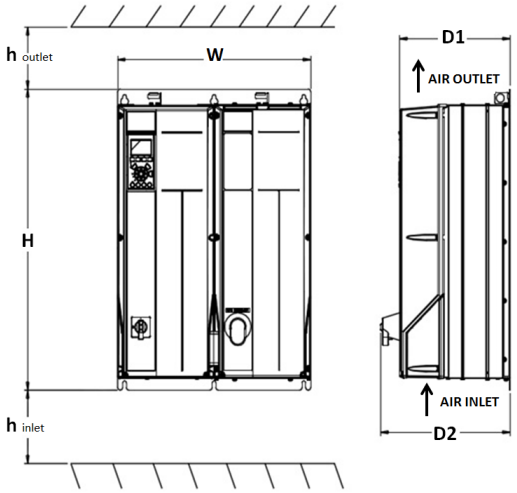

SIDE - SIDE

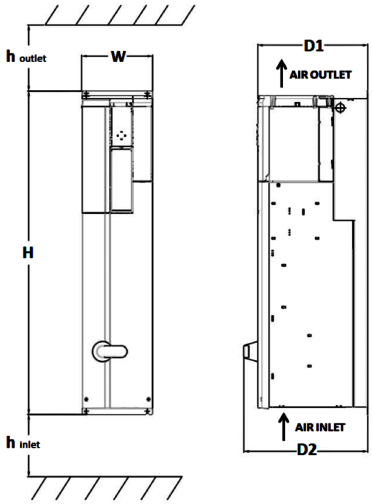

TOP - BOTTOM

Frame Data	Nominal Weight lbs/Kg	Temperature Rating (°F/°C)		Enclosure Rating		Dimensions						
		NEMA 1	NEMA 12	NEMA 1	NEMA 12	**H** inches/mm	**W** inches/mm	**D1** inches/mm	**D2** inches/mm	**h inlet** inches/mm	**h outlet** inches/mm	Configuration
A2[1]	35/16	113/45		X		31.74/806	7.63/194	8.27/210	9.73/247	3.94/100	3.94/100	Top-Bottom
A3[1]	35/16	113/45		X		31.74/806	7.63/194	8.27/210	9.73/247	3.94/100	3.94/100	Top-Bottom
A5	55/25		104/40		X	18.86/479	19.18/487	8.55/217	10.30/262	3.94/100	3.94/100	Side-Side
B1	84/38.1		104/40		X	21.48/546	19.09/485	10.84/275	12.86/327	3.94/100	3.94/100	Side-Side
B2	105/48		104/40		X	28.18/716	19.09/485	10.86/276	12.81/325	3.94/100	3.94/100	Side-Side
B3	84/38	104/40		X		41.77/1061	9.11/231	14.15/360	15.94/405	7.87/200	2.00/51	Top-Bottom
B4	106/48	104/40		X		43.30/1100	9.77/248	16.30/414	17.70/450	7.87/200	2.00/51	Top-Bottom
C1	145/66		104/40		X	29.94/761	24.37/619	12.74/324	14.87/378	3.94/100	3.94/100	Side-Side
C2	190/86		104/40		X	33.49/851	29.24/743	13.72/349	16.22/412	8.86/225	8.86/225	Side-Side
C3	167/76	104/40		X		54.38/1381	12.69/322	16.59/422	17.99/457	7.87/200	2.00/51	Top-Bottom
C4	248/112	104/40		X		59.64/1515	15.13/384	16.59/422	18.01/458	8.86/225	2.00/51	Top-Bottom

Notes:
1) A2, A3 and B3 frames require a minimum of 1.5 inch (38.1mm) clearance on either side for proper air flow and cooling

Xylem Inc.
8200 N. Austin Avenue, Morton Grove, IL 60053
Phone: (847)966-3700 Fax: (847)965-8379
www.bellgossett.com
Bell & Gossett is a trademark of Xylem Inc. or one of its subsidiaries.
© 2017 Xylem Inc.

ENCLOSURE DIMENSIONS

UL Type 3R Dimensions

UL Type 3R P-Drive Bypass	H x W x D (A x B x C)
CIE3-BYP001-P2/3 ~ CIE3-BYP015-P2/3	36.5” x 26” x 16.56”
CIE3-BYP001-P4/3 ~ CIE3-BYP015-P4/3	
CIE3-BYP020-P2/3	41.5” x 29” x 16.56”
CIE3-BYP020-P4/3 ~ CIE3-BYP025-P4/3	
CIE3-BYP025-P2/3 CIE3-BYP030-P2/3	46.5” x 29” x 16.56”
CIE3-BYP030-P4/3 ~ CIE3-BYP040-P4/3	
CIE3-BYP050-P4/3 ~ CIE3-BYP075-P4/3	51.5” x 34” x 20.6”
CIE3-BYP040-P2/3	56.5” x 39” x 20.6”
CIE3-BYP100-P4/3	

** Contact Franklin Control Systems or visit www.franklin-controls.com for larger bypass dimensions*

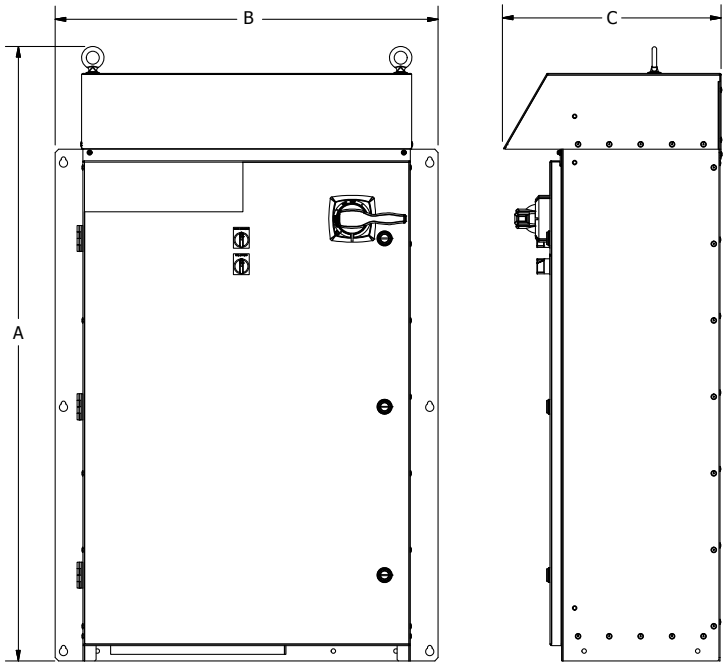

MAROKO & SHWE, INC.
Consulting Mechanical Engineers

PROP 39 – SHANDIN HILLS MIDDLE SCHOOL

HVAC EQUIPMENT CATALOG DATA

MAROKO & SHWE, INC.
Consulting Mechanical Engineers

PROP 39 SHANDIN HILLS MIDDLE SCHOOL

HVAC EQUIPMENT CATALOG DATA

Table of Contents

Symbol	Description	Page No.
CH-1	(2) 60 TON WATER COOLED SCROLL CHILLERS WITH DISTRIBUTION PANEL	1 - 12
P-1 & P-2	CHILLED WATER PUMPS	13-15
P-3 & P-4	CONDENSER WATER PUMPS	16-18

CH-1

Unit Information

Tag Name: **AdvanTE3C 30MPW-123558**
Model Number: **AdvanTE3C 30MPW**
Manufacturing Source: **Charlotte, NC USA**
Refrigerant: **R410A**
Operating Weight: **5353** lb
Shipping Weight: **5503** lb
Please refer to the submittal for dimensional information

Accessories and Installed Options

Carrier Distribution Panel
Water Manifold Piping (MPW) (Comfort Cooling Duty)
Height Adjustment Kit and Water Manifold Sound Enclosure
Scrolling Marquee Display with BACnet Communication Option
Bag and Compressor Insulation
Disconnect
Iron Y Strainer (40 mesh, 6" Flanged)

No strainer selected, strainer by others required between pump and chiller.

Chiller Warranty Information (Note: for US & Canada only)

Ordering Information

Part Number	Description	Quantity
30MP-900---066	AdvanTech 30MP System	1
	Multi-Unit Controller	
	Carrier Distribution Panel	
	Water Manifold Piping (MPW) (Comfort Cooling Duty)	
	Height Adjustment Kit and Water Manifold Sound Enclosure	
	Scrolling Marquee Display with BACnet Communication Option	
	Bag and Compressor Insulation	
	Disconnect	
30MP-900---010	Iron Y Strainer (40 mesh, 6" Flanged)	2

Certified Drawing for AdvanTE3C 30MPW-123558

Project: SBUSD - Shandin Hill MS
Prepared By:

02/13/2018
11:19AM

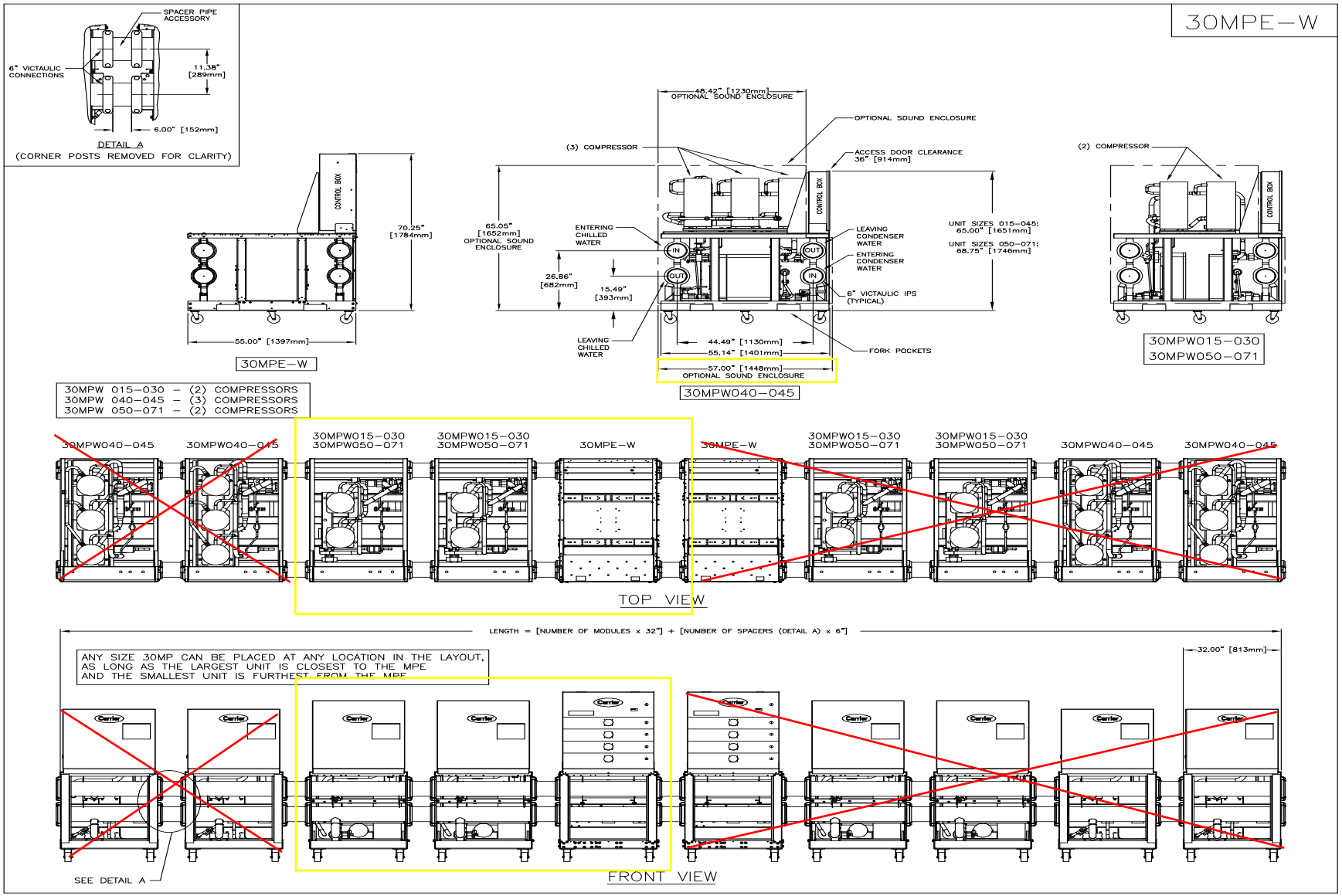

Summary Performance Report For AdvanTE3C 30MPW-123558

Project: SBUSD - Shandin Hill MS 02/13/2018
Prepared By: 11:19AM

AquaSnap Water Cooled Scroll Chiller

Chillers: L1-L4, R1-R4
Distribution Panels: MPEL & MPER

Unit Information

Tag Name: **AdvanTE3C 30MPW-123558**
Model Number: **AdvanTE3C 30MPW**
Manufacturing Source: **Charlotte, NC USA**
Refrigerant: **R-410A**
Total unit quantity*: **3**
Operating Weight: **5353** lb
Shipping Weight: **5503** lb
* Includes MPE module(s)
Please refer to the submittal for dimensional information

Evaporator Information

Fluid Type: **Fresh Water**
Fouling Factor: **0.000100** (hr-sqft-F)/BTU
Leaving Temperature: **44.00** °F
Entering Temperature: **54.27** °F
Fluid Flow: **278.4** gpm
System Pressure Drop**: **16.2** ft H2O
** Corresponds to pressure drop across largest unit in the system

Condenser Information

Fluid Type: **Fresh Water**
Fouling Factor: **0.000250** (hr-sqft-F)/BTU
Leaving Temperature: **95.09** °F
Entering Temperature: **85.00** °F
Fluid Flow: **348.0** gpm
System Pressure Drop**: **17.0** ft H2O
** Corresponds to pressure drop across largest unit in the system

Performance Information

Cooling Capacity: **121.2** Tons
Heating Capacity: **1,748,000** BTU/hr
Total Unit Power: **90.57** kW
Cooling Efficiency: **0.7474** kW/Ton
+Heating Efficiency (COPH): **5.656** kW/kW

Available System Accessories and Installed Options:

Carrier Distribution Panel
Water Manifold Piping (MPW) (Comfort Cooling Duty)
Height Adjustment Kit and Water Manifold Sound Enclosure
Scrolling Marquee Display with BACnet Communication Option
Bag and Compressor Insulation
Disconnect
Iron Y Strainer (40 mesh, 6" Flanged)

Electrical Information

Unit Voltage: **460-3-60** V-Ph-Hz
Minimum Voltage: **414** Volts
Maximum Voltage: **506** Volts

Electrical Information for MPEL
Amps

MCA	213.0
MOCP	300.0
ICF	413.2
Rec Fuse Size	250.0

Electrical Information for MPER
Amps

MCA	-
MOCP	-
ICF	-
Rec Fuse Size	-

Note: The above data is the estimated performance of the user selected modular chillers in a paralell application. The official certified ratings of each chiller should be obtained from the AHRI approved selection software. Certified units may be found in the AHRI directory at www.ahridirectory.org

Nonstandard Part-Load Value

NPLV.IP: **24.53** BTU/Wh
NPLV.IP: **0.4892** kW/Ton

Unit Performance				
Percent of Full Load Capacity, %	100.00	75.00	50.00	25.00
Percent of Full Load Power, %	100.00	58.85	28.67	15.17
Cooling Capacity, Tons	121.2	90.89	60.60	30.30
Total Unit Power, kW	90.57	53.31	25.97	13.74
Efficiency, (EER), BTU/Wh	16.06	20.46	28.00	26.46
Efficiency, kW/Ton	0.7474	0.5865	0.4286	0.4535
Evaporator Data				
Fluid Entering Temperature, °F	54.27	51.79	49.20	46.60
Fluid Leaving Temperature, °F	44.00	44.00	44.00	44.00
Fluid Flow Rate, gpm	278.4	278.4	278.4	278.4
Fouling Factor, (hr-sqft-F)/BTU	0.000100	0.000100	0.000100	0.000100
Condenser Data				
Fluid Entering Temperature, °F	85.00	75.00	65.00	65.00
Fluid Leaving Temperature, °F	95.09	84.17	70.86	67.96
Fluid Flow Rate, gpm	348.0	348.0	348.0	348.0
Fouling Factor, (hr-sqft-F)/BTU	0.000250	0.000250	0.000250	0.000250

Summary Performance Report For AdvanTE3C 30MPW-123558

Project: SBUSD - Shandin Hill MS 02/13/2018
Prepared By: 11:19AM

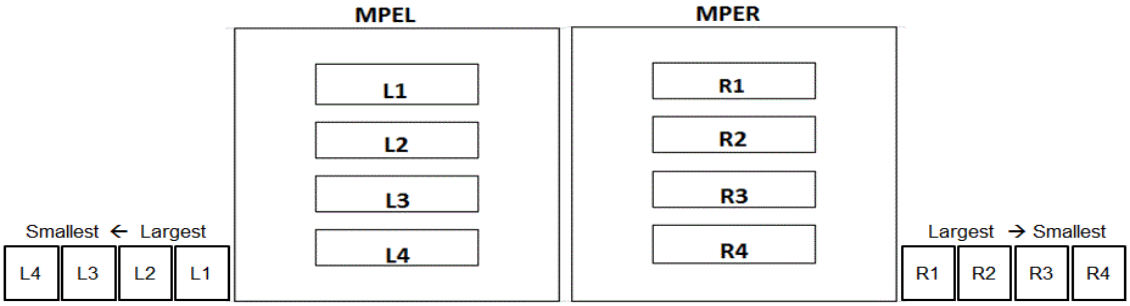

Unit Information

Tag Name: **AdvanTE3C 30MPW-123558**
Model Number: **30MPEW**
Manufacturing Source: **Charlotte, NC USA**
Refrigerant: **R-410A**

MPEL Operating Weight: **781** lb
MPEL Length: **57** in
MPEL Width: **32** in
MPEL Height: **70** in

L1 30MPW 060-123558	**30MPW 060**	**-**	**-**
MCA	106.5	MCA	---
MOCP	150.0	MOCP	---
ICF	320.1	ICF	---
Rec Fuse Size	125.0	Rec Fuse Size	---
L2 30MPW 060-123558	**30MPW 060**	**-**	**-**
MCA	106.5	MCA	---
MOCP	150.0	MOCP	---
ICF	320.1	ICF	---
Rec Fuse Size	125.0	Rec Fuse Size	---
-	**-**	**-**	**-**
MCA	---	MCA	---
MOCP	---	MOCP	---
ICF	---	ICF	---
Rec Fuse Size	---	Rec Fuse Size	---
-	**-**	**-**	**-**
MCA	---	MCA	---
MOCP	---	MOCP	---
ICF	---	ICF	---
Rec Fuse Size	---	Rec Fuse Size	---

Note: The above data is the estimated performance of the user selected modular chillers in a paralell application. The official certified ratings of each chiller should be obtained from the AHRI approved selection software. Certified units may be found in the AHRI directory at www.ahridirectory.org

UNIT	OPERATING WEIGHT (lb) MANIFOLD UNIT	DIMENSIONS (in) A	B	C	D	E	F	G	H	J
30MPW050	2038 (924.4 kg)	13.34 (338.8 mm)	27.28 (692.9 mm)	31.39 (797.3 mm)	6.43 (163.4 mm)	8.45 (214.6 mm)	20.43 (519.0 mm)	6.43 (163.4 mm)	8.45 (214.6 mm)	20.43 (519.0 mm)
30MPW055	2053 (931.2 kg)	13.31 (338.1 mm)	27.29 (693.2 mm)	31.48 (799.6 mm)						
30MPW060	2117 (960.2 kg)	13.32 (338.3 mm)	27.62 (701.5 mm)	31.19 (792.2 mm)						
30MPW065	2148 (974.3 kg)	13.26 (336.8 mm)	27.63 (701.8 mm)	31.36 (796.5 mm)						
30MPW071	2155 (977.5 kg)	13.42 (340.8 mm)	27.55 (699.8 mm)	31.17 (791.7 mm)						

THIS DRAWING SHOWS STYLE "B" WATER MANIFOLD. THE STYLE "B" WATER MANIFOLD DESIGN IS USED ON ALL 50–71 TON 30MP MODELS AND IS THE STANDARD MANIFOLD DESIGN FOR THE 15–45 TON MODELS FOR ORDERS PLACED AFTER FEBRUARY 2016. STYLE "A" WATER MANIFOLD IS THE ORIGINAL MANIFOLD DESIGN FOR THE 15–45 TON 30MP UNITS AND IS NOT COMPATIBLE WITH THE STYLE "B" WATER MANIFOLD DESIGN. SEE CURRENT INSTALLATION MANUAL FOR MO

Carrier United Technologies

THIS DOCUMENT IS THE PROPERTY OF CARRIER CORPORATION AND IS DELIVERED UPON THE EXPRESS CONDITION THAT THE CONTENTS WILL NOT BE DISCLOSED OR USED WITHOUT CARRIER CORPORATION'S WRITTEN CONSENT.

SUBMISSION OF THESE DRAWINGS OR DOCUMENTS DOES NOT CONSTITUTE PART PERFORMANCE OR ACCEPTANCE OF CONTRACT.

30MPW050–074 (LIQUID–COOLED CHILLERS)
MANIFOLD UNIT

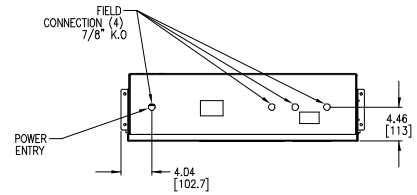

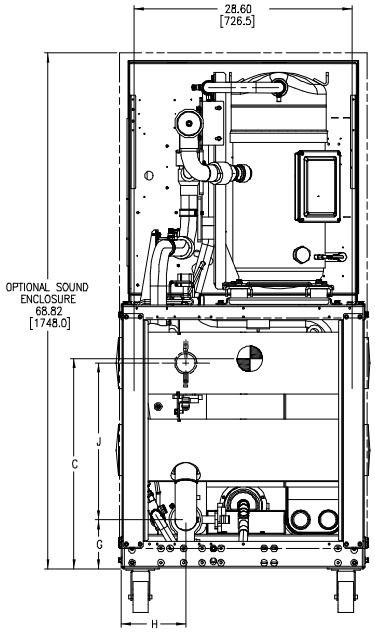

OPPOSITE CONTROL PANEL END

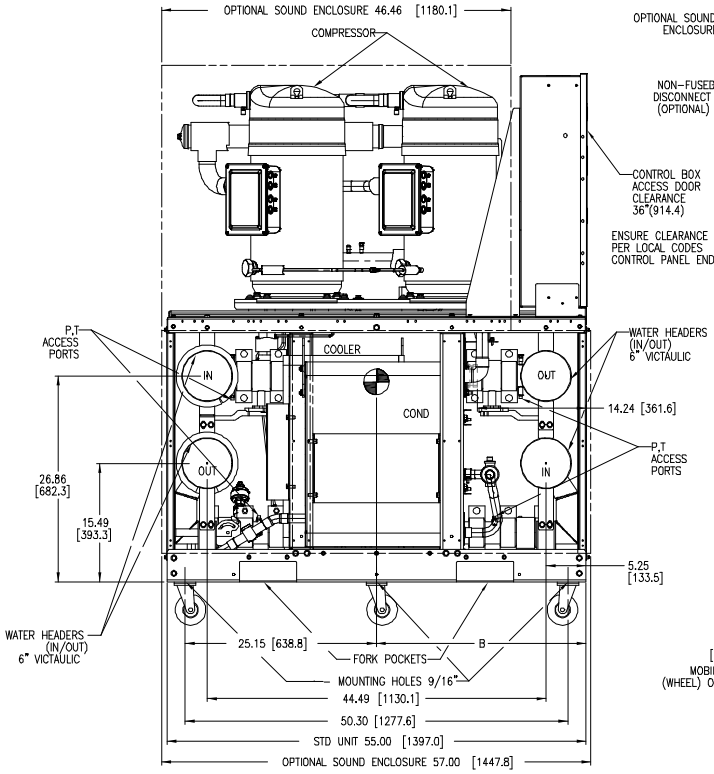

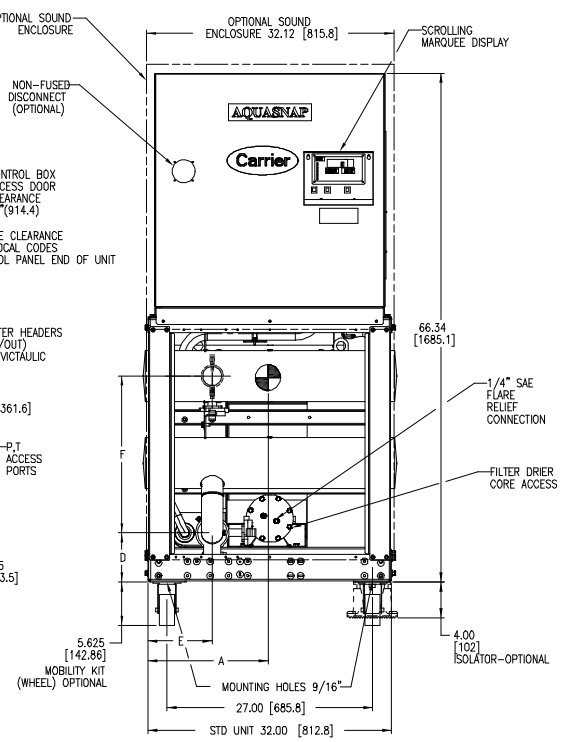

CONTROL PANEL END

NOTES:
1. OPERATING WEIGHT INCLUDES WEIGHT OF WATER AND REFRIGERANT.
2. ⊕ DENOTES CENTER OF GRAVITY.
3. DIMENSIONS IN ( ) ARE IN MILLIMETERS AND WEIGHTS IN ( ) ARE IN KILOGRAMS.
4. ALLOW 36" (914.4) CLEARANCE ON CONTROL PANEL END, OPPOSITE CONTROL PANEL END AND ABOVE THE UNIT AND IN ACCORDANCE WITH LOCAL CODE.
5. ——— – ——— – ——— – ——— DENOTES ACCESSORY OR FACTORY INSTALLED OPTION.

DATE	SUPERCEDES			REV
06/01/15	A	CERTIFIED	30MP555666	B

Field Wiring Diagram for L1 30MPW 060-123558

Project: SBUSD - Shandin Hill MS
Prepared By:

02/13/2018
11:19AM

NOTES:

1. FACTORY WIRING IS IN ACCORDANCE WITH UL 1995 STANDARDS. FIELD MODIFICATIONS OR ADDITIONS MUST BE IN COMPLIANCE WITH ALL APPLICABLE CODES.

2. ALL UNITS OR MODULES HAVE SINGLE POINT PRIMARY POWER CONNECTION. MAIN POWER MUST BE SUPPLIED FROM A FIELD OR FACTORY SUPPLIED DISCONNECT.

3. WIRING FOR MAIN FIELD SUPPLY MUST BE RATED 75C. USE COPPER CONDUCTORS ONLY.
   a. INCOMING WIRE SIZE RANGE FOR TERMINAL BLOCK WITH MCA UP TO 120 AMPS IS 14 AWG (AMERICAN WIRE GAUGE) TO 2/0.
   b. INCOMING WIRE SIZE RANGE FOR TERMINAL BLOCK WITH MCA FROM 120.1 AMPS TO 310 AMPS IS 6 AWG (AMERICAN WIRE GAUGE) TO 350 KCMIL.
   c. INCOMING WIRE SIZE RANGE FOR NON-FUSED DISCONNECT WITH MCA UP TO 50 AMPS IS 10 AWG (AMERICAN WIRE GAUGE) TO 2 AWG.
   d. INCOMING WIRE SIZE RANGE FOR NON-FUSED DISCONNECT WITH MCA FROM 50.1 AMPS TO 90 AMPS IS 6 AWG (AMERICAN WIRE GAUGE) TO 3/0.
   e. INCOMING WIRE SIZE RANGE FOR NON-FUSED DISCONNECT WITH MCA FROM 90.1 AMPS TO 250 AMPS IS 4 AWG (AMERICAN WIRE GAUGE) TO 350 KCMIL.

4. REFER TO CERTIFIED DIMENSIONAL DRAWINGS FOR EXACT LOCATIONS OF THE MAIN POWER AND CONTROL POWER ENTRANCE LOCATIONS.

5. TERMINAL 24 OF THE LVT IS FOR CONTROL OF CHILLED WATER PUMP (CWP) STARTER. TERMINAL 20 OF THE LVT IS FOR CONTROL OF CONDENSER PUMP (CNP) STARTER OR CONDENSER FAN RELAY (CFR). THE MAXIMUM LOAD ALLOWED FOR THE RELAYS IS 5 VA SEALED, 10 VA INRUSH AT 24 VAC. FIELD POWER SUPPLY IS NOT REQUIRED.

6. TERMINAL 25 OF LVT IS FOR AN ALARM RELAY. THE MAXIMUM LOAD ALLOWED FOR THE ALARM RELAY IS 5 VA SEALED, 10 VA INRUSH AT 24 VAC. FIELD POWER SUPPLY IS NOT REQUIRED.

7. MAKE APPROPRIATE CONNECTIONS TO LVT AS SHOWN FOR ENERGY MANAGEMENT BOARD OPTIONS. THE CONTACTS FOR DEMAND LIMIT AND ICE DONE OPTIONS MUST BE RATED FOR DRY CIRCUIT APPLICATION CAPABLE OF HANDLING 24 VAC LOAD UP TO 50 MA. INSTALLATION OF OPTIONAL ENERGY MANAGEMENT BOARD REQUIRED.

8. REMOVE JUMPER BETWEEN TERMINALS 16 AND 17 WHEN FIELD CHILLED WATER PUMP INTERLOCK (CWPI) IS INSTALLED.

9. ALL DISCRETE INPUTS ARE 24 VAC.

UNITED TECHNOLOGIES CARRIER P.O. BOX 4808 SYRACUSE, NY 13221

THIS DOCUMENT IS THE PROPERTY OF CARRIER CORPORATION AND IS DELIVERED UPON THE EXPRESS CONDITION THAT THE CONTENTS WILL NOT BE DISCLOSED OR USED WITHOUT CARRIER CORPORATION'S WRITTEN CONSENT.

SUBMISSION OF THESE DRAWINGS OR DOCUMENTS DOES NOT CONSTITUTE PART PERFORMANCE OR ACCEPTANCE OF CONTRACT.

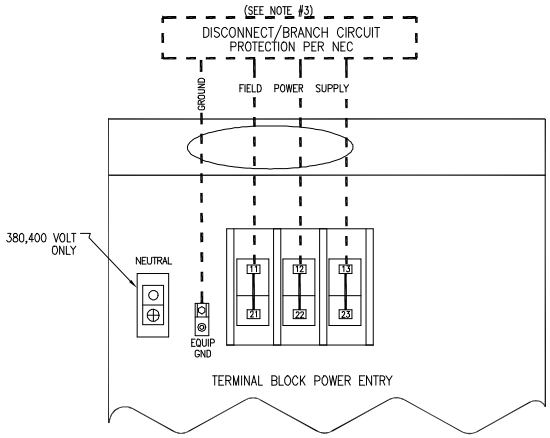

TERMINAL BLOCK

LVT CONTROL WIRING

LEGEND:

ALM R – ALARM RELAY (24V) 5 VA MAX
AWG – AMERICAN WIRE GAUGE
CWP – CHILLER WATER PUMP
CWPI – CHILLED WATER PUMP INTERLOCK
CWV – CONDENSER WATER VALVE
EMM – ENERGY MANAGEMENT MODULE
LVT – LOW VOLTAGE TERMINAL STRIP
SPT – SPACE TEMPERATURE
CNP – CONDENSER PUMP
CFR – CONDENSER FAN RELAY
CNPI – CONDENSER PUMP INTERLOCK
CNFS – CONDENSER FLOW SWITCH
OAT – OUTSIDE AIR TEMPERATURE

FIELD POWER WIRING
FIELD CONTROL WIRING
FACTORY INSTALLED WIRING

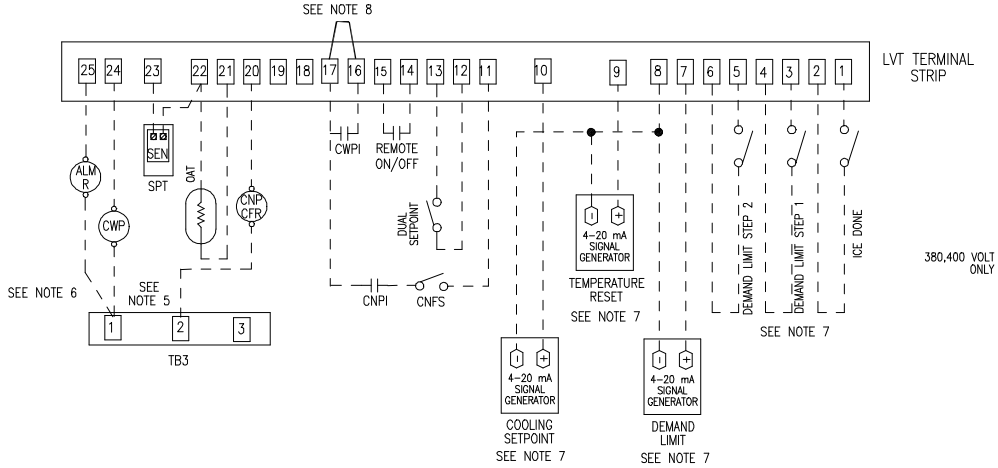

COM WIRING

LVT CCN

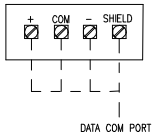

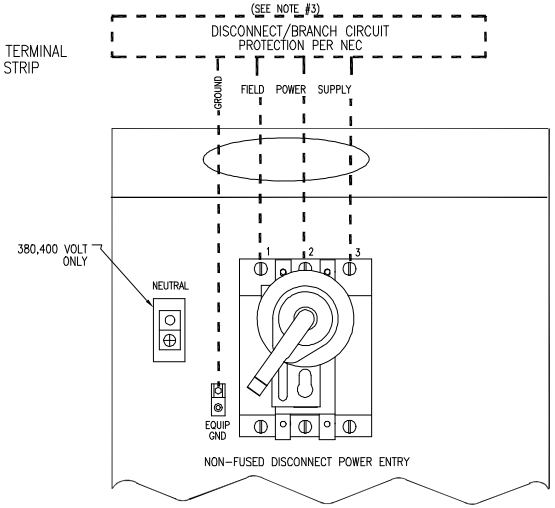

NON-FUSED DISCONNECT

DATE	SUPERCEDES			REV
01/16/15	–	30MP 015-074 ELECTRICAL	30MP555560	B

AquaSnap™ Water Cooled Scroll Chiller

Unit Information

Tag Name:	**L1 30MPW 060-123558**	
Model Number:	**30MPW060**	
Quantity:	**1**	
Manufacturing Source:	**Charlotte, NC USA**	
Refrigerant:	**R-410A**	
Shipping Weight:	**2361**	lb
Operating Weight:	**2286**	lb
Unit Length:	**55**	in
Unit Width:	**32**	in
Unit Height:	**66**	in

Evaporator Information

Fluid Type:	**Fresh Water**	
Fouling Factor:	**0.000100**	(hr-sqft-F)/BTU
Leaving Temperature:	**43.85**	°F
Entering Temperature:	**54.26**	°F
Fluid Flow:	**139.2**	gpm
* Pressure Drop:	**16.2**	ft H2O
Saturated Suction Temp. (Circuit A):	**37.6**	°F

***Chiller pressure drop is that of unit on its own, and does not reflect pressure drop in a balanced multi-chiller configuration.**

Condenser Information

Fluid Type:	**Fresh Water**	
Fouling Factor:	**0.000250**	(hr-sqft-F)/BTU
Leaving Temperature:	**95.09**	°F
Entering Temperature:	**85.00**	°F
Fluid Flow:	**174.0**	gpm
* Pressure Drop:	**17.0**	ft H2O
Saturated Discharge Temp. (Circuit A):	**98.1**	°F

***Chiller pressure drop is that of unit on its own, and does not reflect pressure drop in a balanced multi-chiller configuration.**

Performance Information

Cooling Capacity:	**60.60**	Tons
+Heating Capacity:	**873,900**	BTU/hr
Total Unit Power:	**45.28**	kW
Cooling Efficiency (EER):	**16.06**	BTU/Wh
Cooling Efficiency:	**0.7473**	kW/Ton
+Heating Efficiency (COPH):	**5.656**	kW/kW

Accessories and Installed Options

Water Manifold Piping (Comfort Cooling Duty)
Non-Fused Disconnect
Scrolling Marquee Display with BACnet Communication Option
Bag and Compressor Insulation
Height Adjustment Kit and Water Manifold Sound Enclosure

No strainer selected, strainer by others required between pump and chiller.

Electrical Information

Unit Voltage: **460-3-60** V-Ph-Hz

Connection Type: **Single Point**
Minimum Voltage: **414** Volts
Maximum Voltage: **506** Volts

Amps	Electrical Circuit 1	Electrical Circuit 2
MCA	106.5	---
MOCP	150.0	---
ICF	320.1	---
Rec Fuse Size	125.0	---

Sound pressure level data used to develop this program was determined in accordance with AHRI Standard 575-2008 for water chillers in a free field.

Certified in accordance with the AHRI Water-Cooled Water-Chilling and Heat Pump Water-Heating Packages Certification Program, which is based on AHRI Standard 550/590 (I-P) and AHRI Standard 551/591 (SI). Certified units may be found in the AHRI Directory at www.ahridirectory.org

+Heating Performance is not certified under AHRI 550/590 or AHRI 551/591.

Acoustic Summary For L1 30MPW 060-123558

Project: SBUSD - Shandin Hill MS 02/13/2018
Prepared By: 11:19AM

Unit Parameters

Tag Name:	**L1 30MPW 060-123558**	
Model Number:	**30MPW060**	
Condenser Type:	**Water Cooled**	
Compressor Type:	**Scroll**	
Chiller Nameplate Voltage:	**460-3-60**	V-Ph-Hz
Quantity:	**1**	
Manufacturing Source:	**Charlotte, NC USA**	
Refrigerant:	**R-410A**	
Shipping Weight:	**2361**	lb
Operating Weight:	**2286**	lb
Unit Length:	**55**	in
Unit Width:	**32**	in
Unit Height:	**66**	in

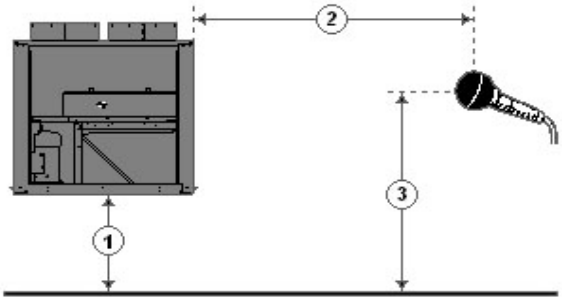

1 - Chiller Height Above Ground
2 - Horizontal Distance From Chiller to Receiver
3 - Receiver Height Above Ground

Accessories and Installed Options

Water Manifold Piping (Comfort Cooling Duty)
Non-Fused Disconnect
Scrolling Marquee Display with BACnet Communication Option
Bag and Compressor Insulation
Height Adjustment Kit and Water Manifold Sound Enclosure

Acoustic Information (Full Load)

Octave Band Center Frequency, Hz	**31**	**63**	**125**	**250**	**500**	**1k**	**2k**	**4k**	**8k**	**Total**
Sound pressure at specified distance in a free field, dB	59	92	62	68	67	69	65	60	54	92
A-Weighted Sound Pressure Level, dBA	20	66	46	60	64	69	67	61	53	73
Sound Power at Chiller Acoustic Center, dB	70	103	73	79	78	80	76	71	65	103
A-Weighted Sound Power, dBA	30	77	57	71	75	80	77	72	64	84

Notes

1 - Chiller Height Above Ground = 0.0 ft
2 - Horizontal Distance From Chiller to Receiver = 3.3 ft
3 - Receiver Height Above Ground = 5.0 ft
Estimated Sound Power levels - dB re: 1 picowatt
Estimated Sound Pressure levels - dB re: 20 micropascal
Estimated sound levels given above are assumed to originate at the acoustic center of the chiller.

Sound pressure level data used to develop this program was determined in accordance with AHRI Standard 575 for water chillers in a free field and ANSI/AHRI Standard 370 for air cooled chillers.

Calculation methods used in this program are patterned after the ASHRAE Guide; other ASHRAE Publications and the AHRI Acoustical Standards. While a very significant effort has been made to insure the technical accuracy of this program, it is assumed that the user is knowledgeable in the art of system sound estimation and is aware of the tolerances involved in real world acoustical estimation. This program makes certain assumptions as to the dominant sound sources and sound paths which may not always be appropriate to the real system being estimated. Because of this, no assurances can be offered that this software will always generate an accurate sound prediction from user supplied input data. If in doubt about the estimation of expected sound levels in a space, an Acoustical Engineer or a person with sound prediction expertise should be consulted.

Unit Information

Tag Name: **30MPEW-L-123558**
Model Number: **30MPEW**
Manufacturing Source: **Charlotte, NC USA**
Refrigerant: **R410A**
MPEL Operating Weight: **781** lb
MPEL Length: **57** in
MPEL Width: **32** in
MPEL Height: **70** in

Accessories and Installed Options

Water Manifold Piping, Height Adjustment Kit, Sound Enclosure Panels & Bag
Electrical Load Side on Left

Chiller Warranty Information (Note: for US & Canada only)

Ordering Information

Part Number	Description	Quantity
30MPEW6JJ00-04LW	Packaged Chiller	1
	Base Unit	
	Water Manifold Piping, Height Adjustment Kit, Sound Enclosure Panels & Bag	
	Electrical Load Side on Left	

Certified Drawing for 30MPEW-L-123558

Project: SBUSD - Shandin Hill MS
Prepared By:

02/13/2018
11:19AM

30MPEW UNIT (SEE NOTE #6)	OPERATING WEIGHT (lb)	CENTER OF GRAVITY LOCATION (in)		
		A	B	C
WIRE	581 (264 kg)	16 (406.4 mm)	23 (584.2 mm)	21 (533.4 mm)
BUSS BAR	633 (287 kg)	16 (406.4 mm)	22 (558.8 mm)	23 (584.2 mm)

Carrier United Technologies
THIS DOCUMENT IS THE PROPERTY OF CARRIER CORPORATION AND IS DELIVERED UPON THE EXPRESS CONDITION THAT THE CONTENTS WILL NOT BE DISCLOSED OR USED WITHOUT CARRIER CORPORATION'S WRITTEN CONSENT.
SUBMISSION OF THESE DRAWINGS OR DOCUMENTS DOES NOT CONSTITUTE PART PERFORMANCE OR ACCEPTANCE OF CONTRACT.

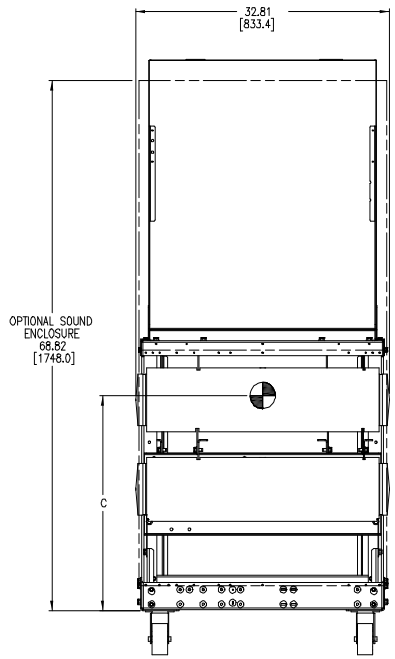

OPPOSITE BREAKER PANEL END

30MPEW DISTRIBUTION UNIT

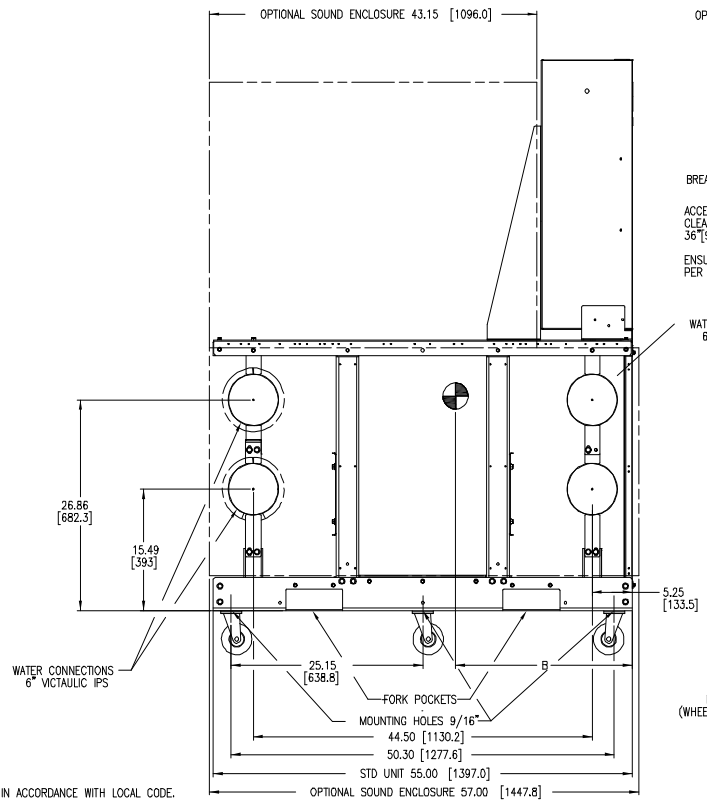

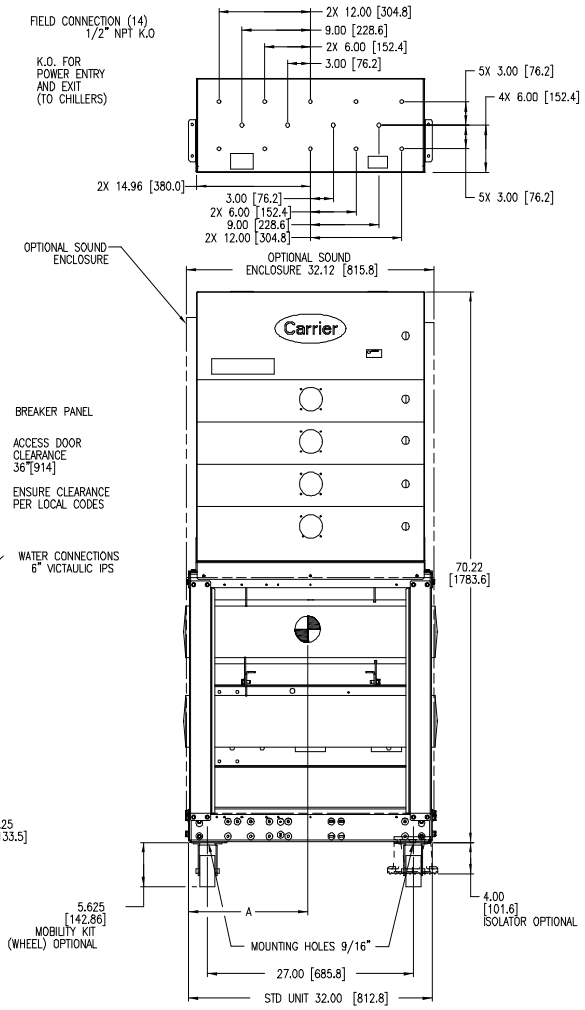

BREAKER PANEL END

NOTES:
1. OPERATING WEIGHT INCLUDES WEIGHT OF WATER.
2. ⊕ DENOTES CENTER OF GRAVITY.
3. DIMENSIONS IN ( ) ARE IN MILLIMETERS AND WEIGHTS IN ( ) ARE IN KILOGRAMS.
4. ALLOW 36" (914.4) CLEARANCE ON CONTROL PANEL END AND ABOVE THE UNIT AND IN ACCORDANCE WITH LOCAL CODE.
5. — — — — — — DENOTES ACCESSORY OR FACTORY INSTALLED OPTION.
6. POSITION 16 IN MODEL NUMBER: "W" INDICATES UNITS WITH WIRE, "B" INDICATES UNITS WITH BUSS BAR.

ITC CLASSIFICATION	SHEET	DATE	SUPERCEDES	CERTIFIED		REV
U.S. ECCN:EAR99	1 OF 2	09/21/16	–		30MP555777	D

Bell & Gossett
a xylem brand

P-1 & P-2

Submittal

Job/Project:	Representative: Dawson Company	
ESP-Systemwize: WIZE-9FA7B9 Created On: 12/24/2018	Phone: (626) 797-9710	
Location/Tag:	Email: sales@dawsonco.com	
Engineer:	Submitted By:	Date:
Contractor:	Approved By:	Date:

Base Mounted End Suction Pump

Series: e-1510

Model: 3GB

Features & Design

- ANSI/OSHA Coupling Guard
- Center Drop Out Spacer Coupling
- Fabricated Heavy Duty Baseplate
- Internally Self-Flushing Mechanical Seal

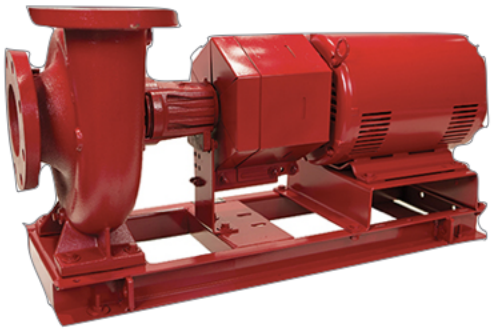

*The Bell & Gossett Series e-1510 is available in 26 sizes and a variety of configuration options that enable customization and flexibility to fit a broad range of operating conditions.

http://bellgossett.com/pumps-circulators/end-suction-pumps/e-1510/

Pump Selection Summary

Pump Capacity	590 US gpm
Pump Head	150 ft
Control Head	45 ft
Duty Point Pump Efficiency	75 %
Pump PLEVv Efficiency	74.3 %
Impeller Diameter	13.5 in
Motor HP	40 hp
Duty Point Power	29.9 bhp
Motor Speed	1800 rpm
RPM @ Duty Point	1745 rpm
NPSHr	9.61 ft
Minimum Shutoff Head	191 ft
Minimum Flow at RPM	101 gpm
Flow @ BEP	507 gpm
Fluid Temperature	44 °F
Fluid Type	Water
Weight *(approx. - consult rep for exact)*	876 lbs
Pump Floor Space Calculation	6.98 ft²

Performance Curve

Energy Efficiency Ratings:
Pump & Motor PEIcl: 0.89 ERcl: 21
Pump, Motor & Drive: PEIvl: 0.44 ERvl: 66

PREMIUM EFFICIENCY PRODUCT

e-1510
3GB
1800 RPM

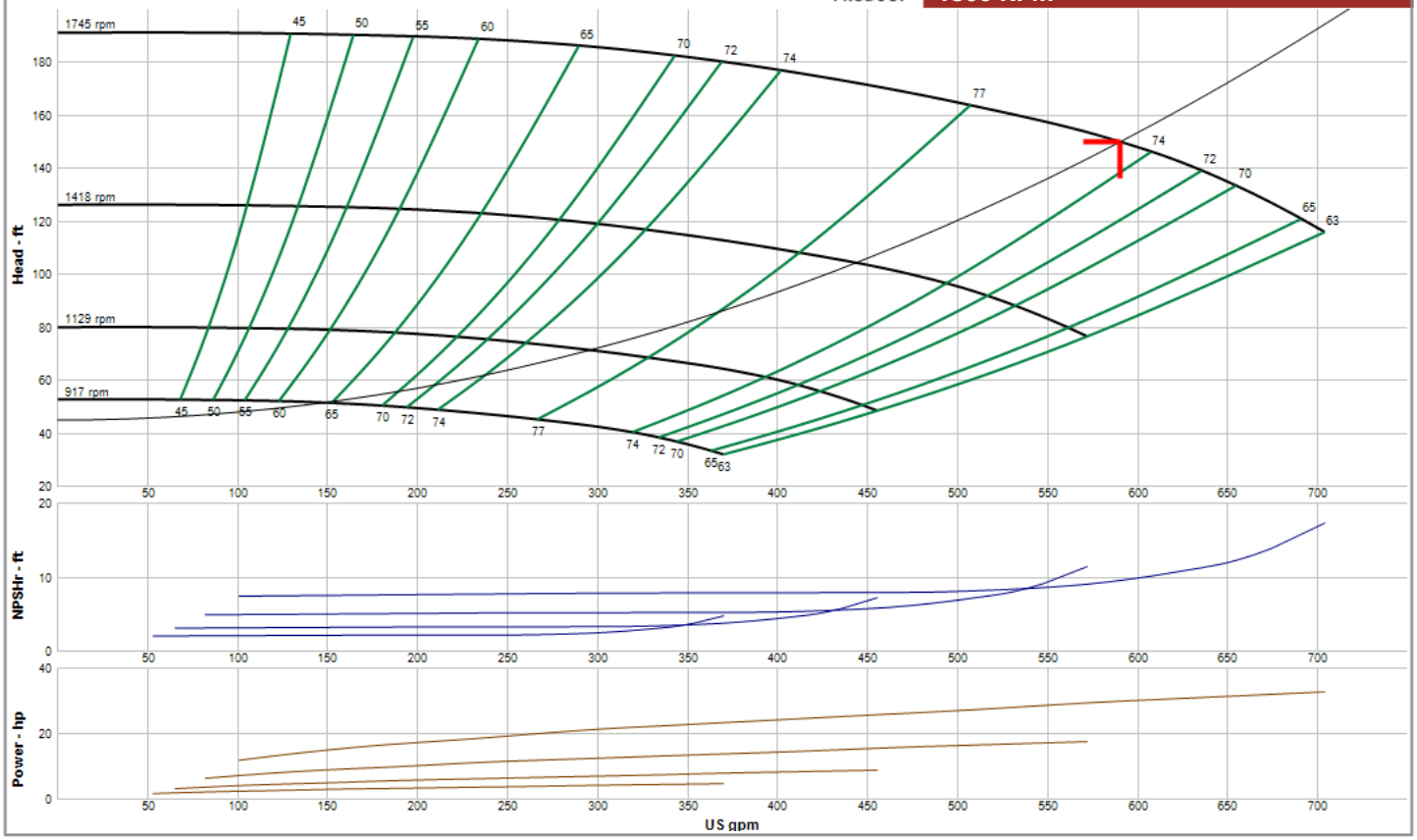

Performance curve meets 14.6 / ISO 9906 acceptance criteria

WIZE-9FA7B9

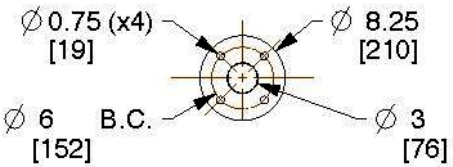

3" DISCHARGE FLANGE
ANSI 125#

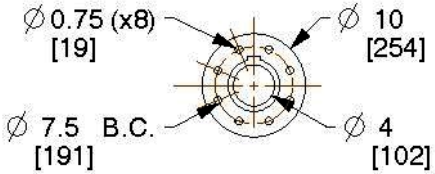

4" SUCTION FLANGE
ANSI 125#

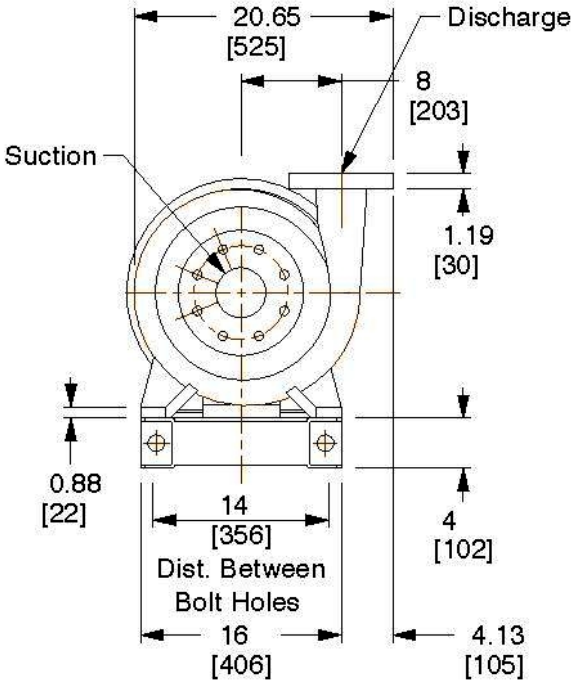

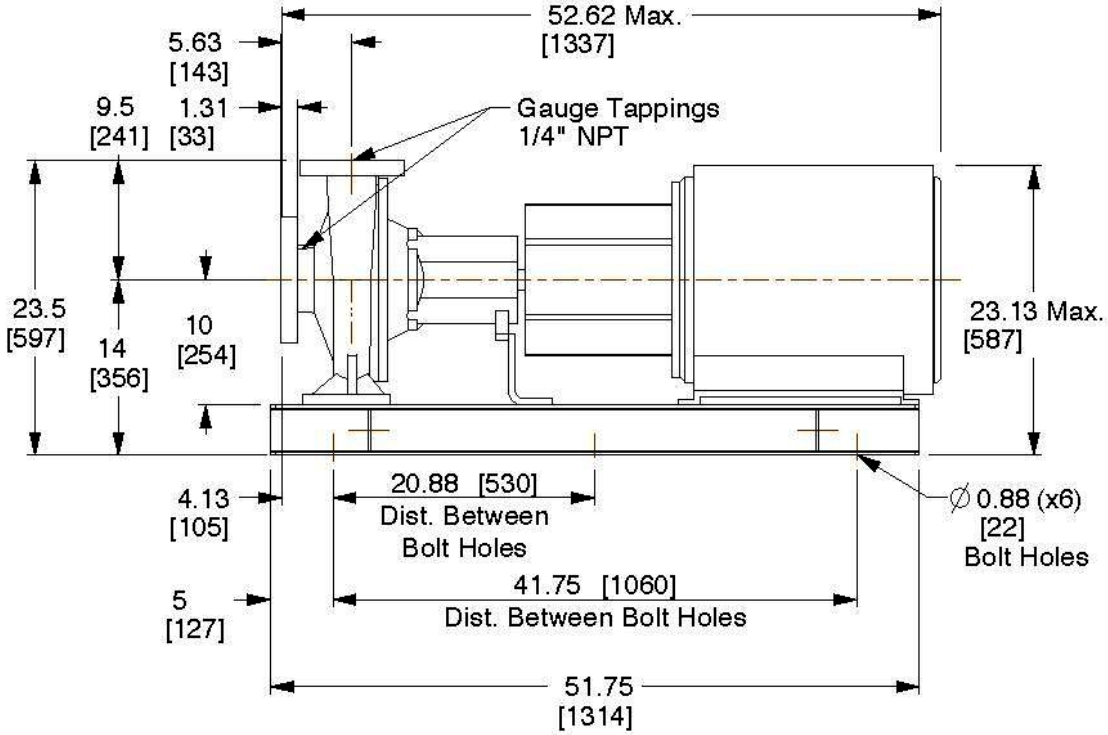

Bell & Gossett
a xylem brand

8200 N. Austin Ave.
Morton Grove, IL 60053, USA

This drawing and the information depicted therein is the property of Xylem. Copies are issued in strict confidence and shall not be reproduced or copied, or used as the basis for the manufacture or sale of products without prior written permission of Xylem.

Dimensions are subject to change

Not to be used for construction unless certified

BG-E1510-3GB-SS-324T-L

Series e-1510 Centrifugal Pumps - Base Mounted

Seal Type: Standard Seal Motor Frame: 324T Frame Type: L Flange: ANSI 125#

Dimensions : IN (mm)	Scale : N.T.S.	Submittal # : B-880.42A

WUCE 9/4/09

Standard Mechanical Configuration

Standard Mechanical Seal	SM, LG, & XL Bearing Frames	ES Bearing Frame
Temperature Range	-20 to 225°F	-20 to 225°F
Maximum Pressure	175 PSI	175 PSI
pH Limitations	7.0 - 9.0	7.0 - 9.0
Elastomer	Buna	Buna
Rotating Face	Carbon	Carbon
Stationary Face	Ceramic	Silicon Carbide
Hardware	Stainless Steel / Brass	Stainless Steel

Mechanical Seal Options	SM, LG, & XL Bearing Frames		
Temperature Range	-20 to 250°F	-10 to 225°F	-20 to 250°F
Maximum Pressure	175 PSI	175 PSI	175 PSI
pH Limitations	7.0 - 11.0	7.0 - 9.0	7.0 - 12.5.0
Elastomer	EPR (Ethylene Propylene Rubber)	FKM (Viton™ or Fluoroelastomer)	EPR (Ethylene Propylene Rubber)
Rotating Face	Carbon	Carbon	Silicon Carbide
Stationary Face	Tungsten Carbide	Ceramic	Silicon Carbide
Hardware	Stainless Steel / Brass	Stainless Steel	Stainless Steel

Mechanical Seal Options	ES Bearing Frame		
Temperature Range	-20 to 250°F	-10 to 225°F	-20 to 250°F
Maximum Pressure	175 PSI	175 PSI	175 PSI
pH Limitations	7.0 - 11.0	7.0 - 9.0	7.0 - 12.5.0
Elastomer	EPR (Ethylene Propylene Rubber)	FKM (Viton™ or Fluoroelastomer)	EPR (Ethylene Propylene Rubber)
Rotating Face	Silicon Carbide	Carbon	Silicon Carbide
Stationary Face	Tungsten Carbide	Silicon Carbide	Silicon Carbide
Hardware	Stainless Steel / Brass	Stainless Steel	Stainless Steel

Stuffing Box Configuration

Mechanical Seal	SM, LG, & XL Bearing Frames
Temperature Range	-20 to 250°F*
Maximum Pressure	175 PSI (Optional 250 PSI)
pH Limitations	7.0 - 11.0
Elastomer	EPR (Ethylene Propylene Rubber)
Rotating Face	Tungsten Carbide
Stationary Face	Carbon
Hardware	Stainless Steel

Packing Option	
Temperature Range	0 to 250°F
Maximum Pressure	175 PSI
pH Limitations	7.0 - 9.0
Material	Braided Graphite Impregnated PTFE

* For operating temperatures above 250°F a cooled flush is required and is recommended for temperatures above 225°F for optimum seal life. On closed systems cooling is accomplished by inserting a small heat exchanger in the flush line to cool the seal flushing fluid.

Flush-line Filters and Sediment Separators are available on special request.

Materials of Construction

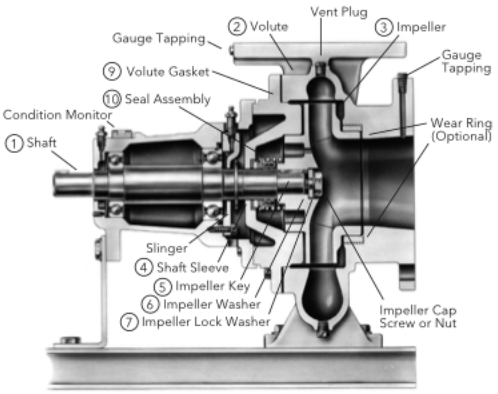

Standard Configuration

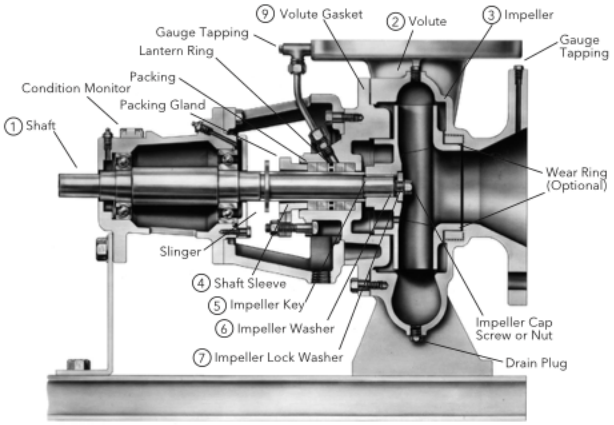

Optional - S Configuration

Description	SM, LG, & XL Bearing Frames	ES Bearing Frame
1 Shaft	ASTM 108 Grade 1144	ASTM 108 Grade 1144
2 Volute	Cast Iron ASTM A48 Class 30B	Cast Iron ASTM A48 Class 30B
3 Impeller	ASTM A743 Grade CF8 - 304 Stainless Steel	ASTM A743 Grade CF8 - 304 Stainless Steel
4 Shaft Sleeve	ASTM 312 Grade TP304 - 304 Stainless Steel	ASTM 312 Grade TP304 - 304 Stainless Steel
5 Impeller Key	#304 Stainless Steel	NA
6 Impeller Washer	Steel	NA
7 Impeller Lock Washer	#304 Stainless Steel (18-8 XL FRM)	NA
8 Impeller Cap Screw	#304 Stainless Steel	NA
8 Impeller Nut	NA	316 Stainless Steel
9 Volute Gasket	Cellulose Fiber	Cellulose Fiber
10 Seal Assembly	Reference Seal Data Tables	Reference Seal Data Tables

Pump Options

- Stainless Steel Volute Wear Ring
- Galvanized Steel Drip Pan
- Stainless Steel Shaft
- Rexnord Omega Spacer Coupling
- Falk T31 Spacer Coupling
- External Flush Line
- Stuffing Box Configuration
- Epoxy Coated Internal Cast Iron Components
- Special Impeller Balancing (ISO 1940 G2.5 or G1.0)
- Certified Performance Tests (Per HI Standard 14.6)
- 250 PSI Working Pressure

xylem
Let's Solve Water

Xylem Inc.
8200 N. Austin Avenue, Morton Grove, IL 60053
Phone: (847)966-3700 Fax: (847)965-8379
www.bellgossett.com

Bell & Gossett is a trademark of Xylem Inc. or one of its subsidiaries.

Bell & Gossett
a xylem brand

P-3 & P-4

Submittal

Job/Project:	Representative: Dawson Company	
ESP-Systemwize: WIZE-4FEAB3 Created On: 12/24/2018	Phone: (626) 797-9710	
Location/Tag:	Email: sales@dawsonco.com	
Engineer:	Submitted By:	Date:
Contractor:	Approved By:	Date:

Base Mounted End Suction Pump

Series: e-1510

Model: 4BD

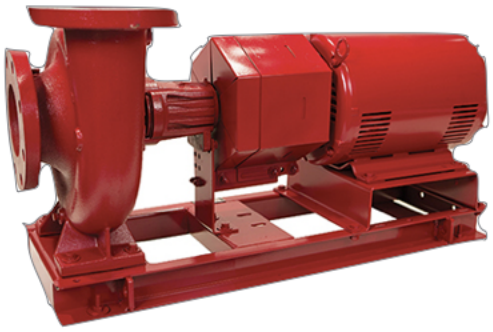

Features & Design

- ANSI/OSHA Coupling Guard
- Center Drop Out Spacer Coupling
- Fabricated Heavy Duty Baseplate
- Internally Self-Flushing Mechanical Seal

*The Bell & Gossett Series e-1510 is available in 26 sizes and a variety of configuration options that enable customization and flexibility to fit a broad range of operating conditions.

http://bellgossett.com/pumps-circulators/end-suction-pumps/e-1510/

Pump Selection Summary

Pump Capacity	680 US gpm
Pump Head	45 ft
Control Head	13.5 ft
Duty Point Pump Efficiency	83 %
Pump PLEVv Efficiency	82.4 %
Impeller Diameter	8.25 in
Motor HP	10 hp
Duty Point Power	9.3 bhp
Motor Speed	1800 rpm
RPM @ Duty Point	1754 rpm
NPSHr	9.19 ft
Minimum Shutoff Head	62.8 ft
Minimum Flow at RPM	121 gpm
Flow @ BEP	607 gpm
Fluid Temperature	68 °F
Fluid Type	Water
Weight *(approx. - consult rep for exact)*	418 lbs
Pump Floor Space Calculation	5.0 ft²

Performance Curve

Energy Efficiency Ratings:
Pump & Motor PEIcl: 0.93 ERcl: 15
Pump, Motor & Drive: PEIvl: 0.45 ERvl: 63

PREMIUM EFFICIENCY PRODUCT

e-1510
4BD
1800 RPM

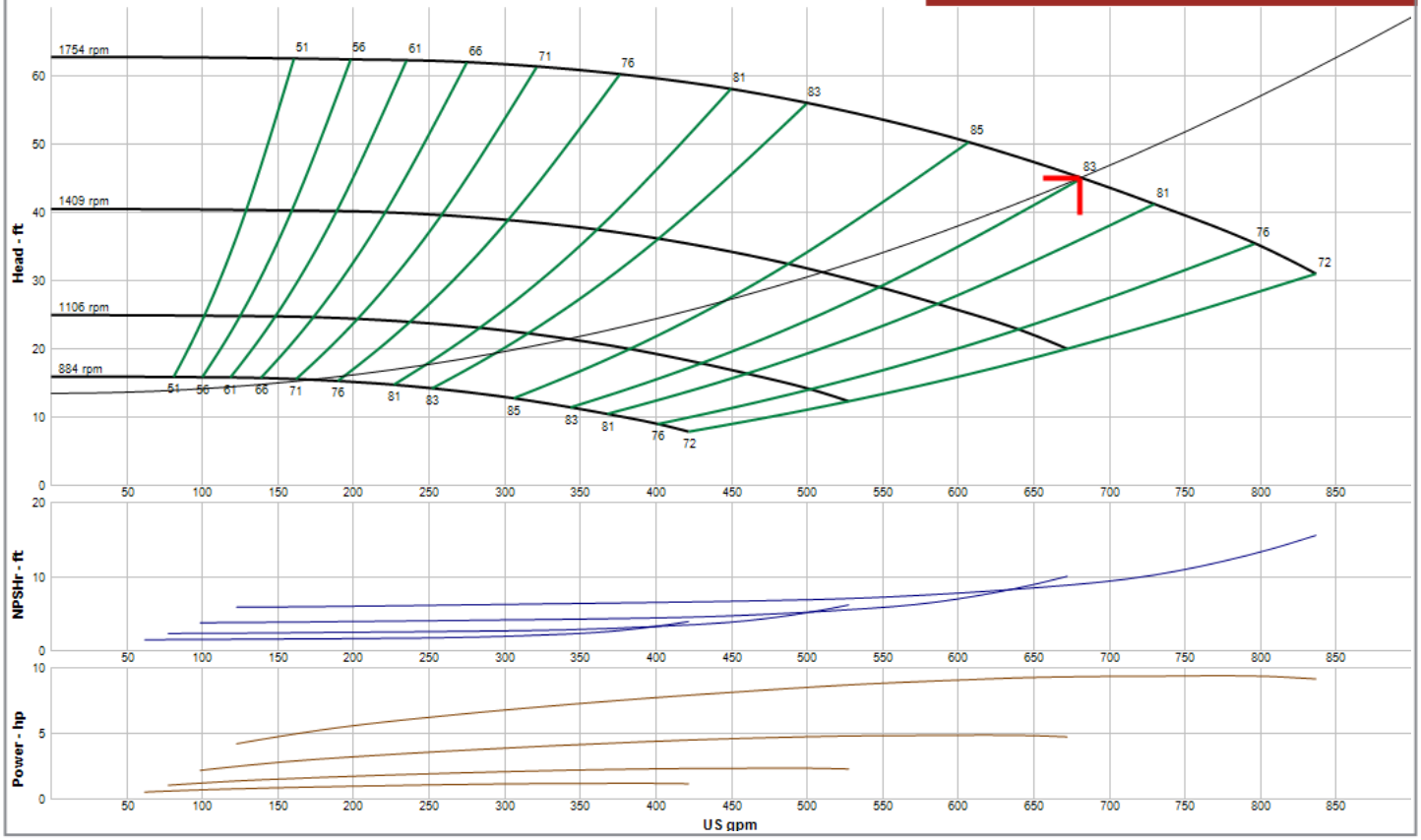

Performance curve meets 14.6 / ISO 9906 acceptance criteria

WIZE-4FEAB3

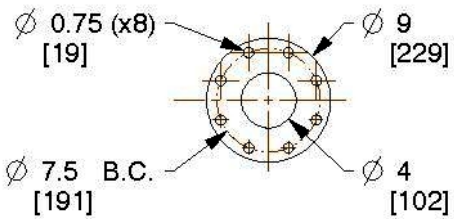

4" DISCHARGE FLANGE
ANSI 125#

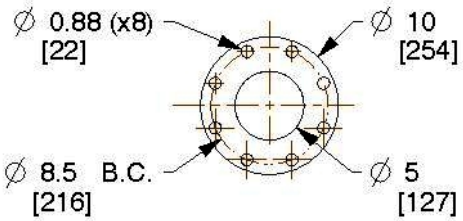

5" SUCTION FLANGE
ANSI 125#

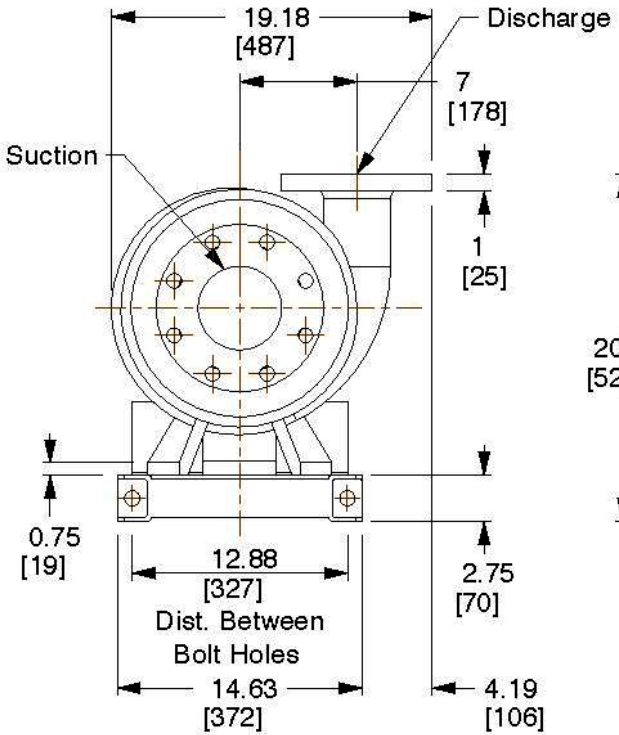

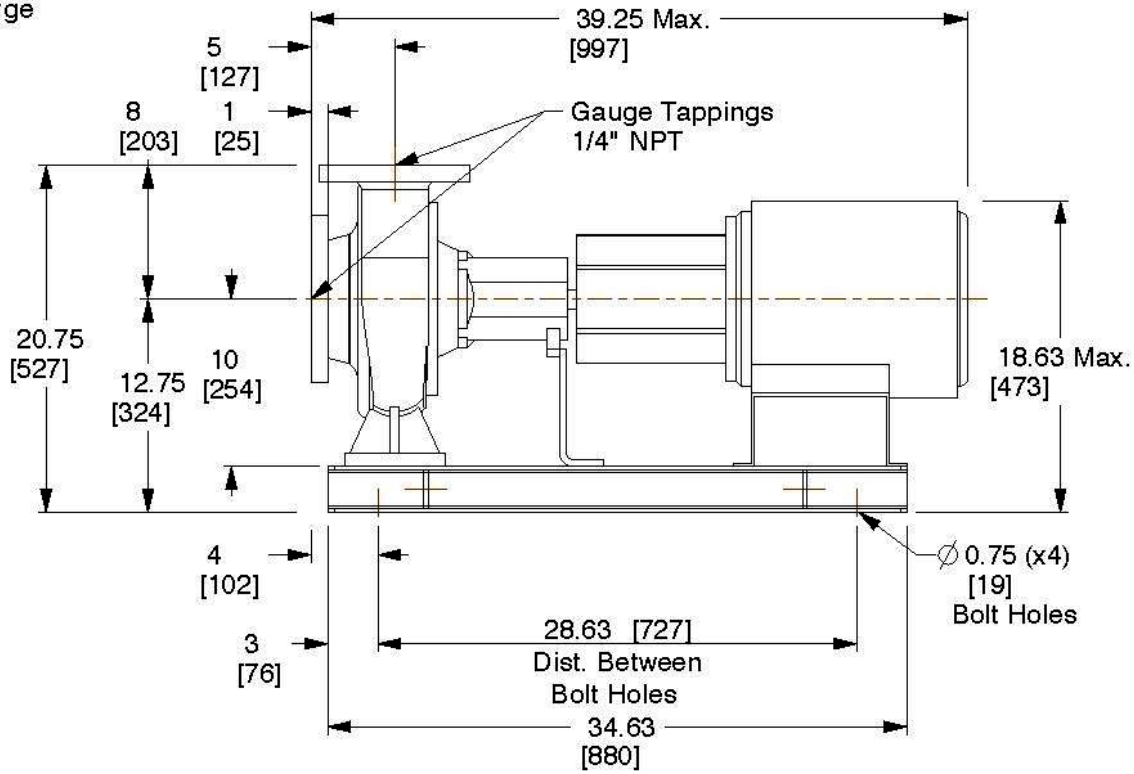

Bell & Gossett
a xylem brand

8200 N. Austin Ave.
Morton Grove, IL 60053, USA

This drawing and the information depicted therein is the property of Xylem. Copies are issued in strict confidence and shall not be reproduced or copied, or used as the basis for the manufacture or sale of products without prior written permission of Xylem.

Dimensions are subject to change

Not to be used for construction unless certified

BG-E1510-4BD-SS-215T-S

Series e-1510 Centrifugal Pumps - Base Mounted

Seal Type: Standard Seal Motor Frame: 215T Frame Type: S Flange: ANSI 125#

Dimensions : IN (mm)	Scale : N.T.S.	Submittal # : B-880.24 B

WDZ-4F4B3

Standard Mechanical Configuration

Standard Mechanical Seal	SM, LG, & XL Bearing Frames	ES Bearing Frame
Temperature Range	-20 to 225°F	-20 to 225°F
Maximum Pressure	175 PSI	175 PSI
pH Limitations	7.0 - 9.0	7.0 - 9.0
Elastomer	Buna	Buna
Rotating Face	Carbon	Carbon
Stationary Face	Ceramic	Silicon Carbide
Hardware	Stainless Steel / Brass	Stainless Steel

Mechanical Seal Options	SM, LG, & XL Bearing Frames		
Temperature Range	-20 to 250°F	-10 to 225°F	-20 to 250°F
Maximum Pressure	175 PSI	175 PSI	175 PSI
pH Limitations	7.0 - 11.0	7.0 - 9.0	7.0 - 12.5.0
Elastomer	EPR (Ethylene Propylene Rubber)	FKM (Viton™ or Fluoroelastomer)	EPR (Ethylene Propylene Rubber)
Rotating Face	Carbon	Carbon	Silicon Carbide
Stationary Face	Tungsten Carbide	Ceramic	Silicon Carbide
Hardware	Stainless Steel / Brass	Stainless Steel	Stainless Steel

Mechanical Seal Options	ES Bearing Frame		
Temperature Range	-20 to 250°F	-10 to 225°F	-20 to 250°F
Maximum Pressure	175 PSI	175 PSI	175 PSI
pH Limitations	7.0 - 11.0	7.0 - 9.0	7.0 - 12.5.0
Elastomer	EPR (Ethylene Propylene Rubber)	FKM (Viton™ or Fluoroelastomer)	EPR (Ethylene Propylene Rubber)
Rotating Face	Silicon Carbide	Carbon	Silicon Carbide
Stationary Face	Tungsten Carbide	Silicon Carbide	Silicon Carbide
Hardware	Stainless Steel / Brass	Stainless Steel	Stainless Steel

Stuffing Box Configuration

Mechanical Seal	SM, LG, & XL Bearing Frames
Temperature Range	-20 to 250°F*
Maximum Pressure	175 PSI (Optional 250 PSI)
pH Limitations	7.0 - 11.0
Elastomer	EPR (Ethylene Propylene Rubber)
Rotating Face	Tungsten Carbide
Stationary Face	Carbon
Hardware	Stainless Steel

Packing Option	
Temperature Range	0 to 250°F
Maximum Pressure	175 PSI
pH Limitations	7.0 - 9.0
Material	Braided Graphite Impregnated PTFE

* For operating temperatures above 250°F a cooled flush is required and is recommended for temperatures above 225°F for optimum seal life. On closed systems cooling is accomplished by inserting a small heat exchanger in the flush line to cool the seal flushing fluid.

Flush-line Filters and Sediment Separators are available on special request.

Materials of Construction

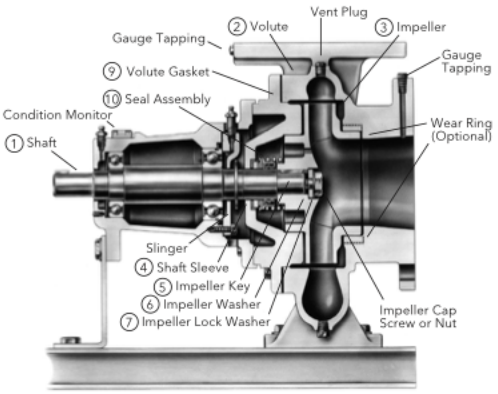

Standard Configuration

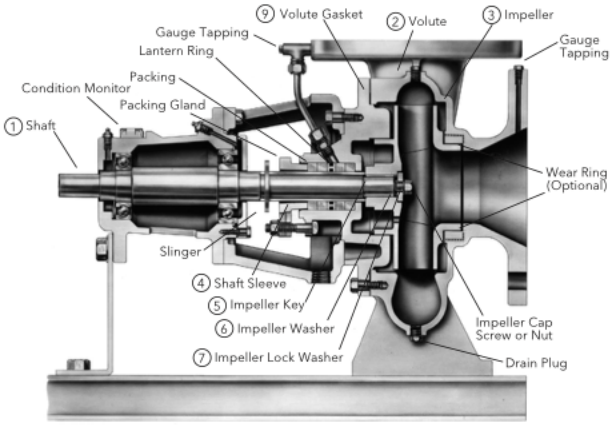

Optional - S Configuration

Description	SM, LG, & XL Bearing Frames	ES Bearing Frame
1 Shaft	ASTM 108 Grade 1144	ASTM 108 Grade 1144
2 Volute	Cast Iron ASTM A48 Class 30B	Cast Iron ASTM A48 Class 30B
3 Impeller	ASTM A743 Grade CF8 - 304 Stainless Steel	ASTM A743 Grade CF8 - 304 Stainless Steel
4 Shaft Sleeve	ASTM 312 Grade TP304 - 304 Stainless Steel	ASTM 312 Grade TP304 - 304 Stainless Steel
5 Impeller Key	#304 Stainless Steel	NA
6 Impeller Washer	Steel	NA
7 Impeller Lock Washer	#304 Stainless Steel (18-8 XL FRM)	NA
8 Impeller Cap Screw	#304 Stainless Steel	NA
8 Impeller Nut	NA	316 Stainless Steel
9 Volute Gasket	Cellulose Fiber	Cellulose Fiber
10 Seal Assembly	Reference Seal Data Tables	Reference Seal Data Tables

Pump Options

- Stainless Steel Volute Wear Ring
- Galvanized Steel Drip Pan
- Stainless Steel Shaft
- Rexnord Omega Spacer Coupling
- Falk T31 Spacer Coupling
- External Flush Line
- Stuffing Box Configuration
- Epoxy Coated Internal Cast Iron Components
- Special Impeller Balancing (ISO 1940 G2.5 or G1.0)
- Certified Performance Tests (Per HI Standard 14.6)
- 250 PSI Working Pressure

xylem
Let's Solve Water

Xylem Inc.
8200 N. Austin Avenue, Morton Grove, IL 60053
Phone: (847)966-3700 Fax: (847)965-8379
www.bellgossett.com

Bell & Gossett is a trademark of Xylem Inc. or one of its subsidiaries.